SANITARY ELECTRONICS STAINLESS STEEL PROGRAM

SANELA®
we make water cool®

CATALOGUE 2018/2019
valid from 1.4.2018

5 years GUARANTEE

AUTOMATIC INFRA-RED, PIEZO AND RADAR URINAL FLUSHING UNITS	5
AUTOMATIC INFRA-RED AND PIEZO WASHBASIN TAPS	13
AUTOMATIC INFRA-RED SINK TAPS	17
AUTOMATIC INFRA-RED AND PIEZO WALL-MOUNTED WASHBASIN TAPS	18
AUTOMATIC WASHBASIN TAPS WITH INTEGRATED SOAP DISPENSER AND AUTOMATIC SOAP DISPENSERS	20
AUTOMATIC INFRA-RED AND PIEZO SHOWER CONTROLS	25
AUTOMATIC INFRA-RED, PIEZO AND MECHANICAL TOILET FLUSHING UNITS	29
STAINLESS STEEL WASHBASINS	33
STAINLESS STEEL DRINKING FOUNTAINS	39
STAINLESS STEEL WASHING TROUGHS	41
STAINLESS STEEL SINKS	44
STAINLESS STEEL WORKING AND WASHING TABLES, FURNITURE	45
STAINLESS STEEL URINALS	49
STAINLESS STEEL URINAL TROUGHS	50
STAINLESS STEEL DIVIDING CURTAIN	51
STAINLESS STEEL TOILETS	53
STAINLESS STEEL TOILETS WITH THE TANK	54
STAINLESS STEEL SQUATTING PAN	55
VANDAL-PROOF COMBINATION UNITS	55
STAINLESS STEEL AUTOMATIC INFRA-RED AND PIEZO SHOWER PANELS	59
STAINLESS STEEL SHOWER TRAYS	60
STAINLESS STEEL BATH TUBS	60
SECURITY EYEWASH AND BODY SHOWERS	61
STAINLESS STEEL CLEANERS SINKS	65
STAINLESS STEEL SWIMMING POOL SLOTTED DRAINS	69
STAINLESS STEEL BATHROOM FLOOR DRAINS	69

COIN AND TOKEN MACHINES	73
SHOWER CONTROL WITH PIEZO BUTTON FOR COIN AND TOKEN MACHINES	75
AUTOMATIC SHOWER CONTROL FOR COIN AND TOKEN MACHINES	77
ACCESSORIES FOR COIN AND TOKEN MACHINES	77
STAINLESS STEEL RFID TOKEN MACHINES	77
ACCESSORIES FOR RFID TOKEN MACHINES	78
STAINLESS STEEL TOILET PAPER HOLDERS AND SUPPLY BIN FOR SANITARY BAGS	81
STAINLESS STEEL SUPPLY BINS FOR PAPER TOWELS AND WASTE BINS	82
STAINLESS STEEL LIQUID SOAP AND DISINFECTION DISPENSERS	85
PLASTIC ACCESSORIES FOR HEALTH CARE	87
STAINLESS STEEL HOOKS AND TOILET BRUSHES	89
AUTOMATIC HAND DRYERS	90
STAINLESS STEEL MIRRORS	91
STAINLESS STEEL PICTOGRAMS, SEPARATORS, SHELVES	91
TOILET COVER SEATS, SIPHON	92
STAINLESS STEEL HAND RAILS	93
DIAPER CHANGER	94
POWER SUPPLY UNITS	94
SHOWER HEADS	95
SELF CLOSING TAPS	96
MOUNTING FRAMES	97
ACCESSORIES	101
TECHNICAL DATA	109
INDEX	131
NOTES	136

AUTOMATIC INFRA-RED, PIEZO AND RADAR URINAL FLUSHING UNITS

SLP 02K	**01022**	Urinal infra-red flushing unit with a mounting box, 24V DC
SLP 02KZ	**01023**	Urinal infra-red flushing unit with a mounting box and integrated power supply, 230V AC
SLP 06K	**01062**	Urinal infra-red flushing unit with a mounting box, 6V

SLP 02N	**42022**	Urinal infra-red flushing unit with a mounting box, 24V DC
SLP 02NZ	**42023**	Urinal infra-red flushing unit with a mounting box and integrated power supply, 230V AC
SLP 02NB	**42025**	Urinal infra-red flushing unit with a mounting box, 6V

SLP 03K	**01032**	Set of SLP 02K and SLR 22, connection included, 24V DC
SLP 03KZ	**01033**	Set of SLP 02KZ and SLR 22, connection included with integrated power supply, 230V AC
SLP 03KB	**01034**	Set of SLP 06K and SLR 22, connection included, 6V

SLP 03N	**01035**	Set of SLP 02N and SLR 22, connection included, 24V DC
SLP 03NZ	**01036**	Set of SLP 02NZ and SLR 22, connection included with integrated power supply, 230V AC
SLP 03NB	**01037**	Set of SLP 02NB and SLR 22, connection included, 6V

SLP 05N	**42052**	Infra-red flushing unit for a group of urinals, 24V DC
SLP 05NZ	**42053**	Infra-red flushing unit for a group of urinals with integrated power supply, 230V AC

SLP 02NP	**42024**	Urinal piezo flushing unit with a mounting box, 24V DC

SLP 02PA	**21022**	Urinal piezo flushing unit with a vandal-proof cover, with a mounting box, 24V DC

SLP 04N	**42042**	Urinal infra-red flushing unit for the Geberit installation No. 457.611.00.1 and No. 111.616.00.1, 24V DC
SLP 04NB	**42045**	Urinal infra-red flushing unit for the Geberit installation No. 457.611.00.1 and No. 111.616.00.1, 6V

SLP 09K	**11022**	Wall-mounted urinal infra-red flushing unit, chromed, 9V

SLP 17	**01170**	Urinal Domino with infra-red flushing unit, 24V DC
SLP 17B	**11176**	Urinal Domino with infra-red flushing unit, 6V

SLP 07S	**11071**	Radar flushing unit on the mounting rail, 24V DC
SLP 07Z	**01071**	Radar flushing unit on the mounting rail with integrated power supply, 230V AC
SLP 07B	**11076**	Radar flushing unit on the mounting rail, 6V

- for urinals: NOVA PRO FELIX 26000000; RENOVA Nr. 1 235300000; NOVA PRO ALEX 66000000; NOVA PRO M36000000; RENOVA Nr. 1 PLAN 235100000

SLP 12R	**01124**	Urinal Vila without cover with a radar flushing unit, 24V DC
SLP 12RZ	**01125**	Urinal Vila without cover with a radar flushing unit and integrated power supply, 230V DC
SLP 12RB	**11127**	Urinal Vila without cover with a radar flushing unit, 6V

SLP 19RS	**11195**	Urinal Golem with a radar flushing unit, 24V DC
SLP 19RZ	**01195**	Urinal Golem with a radar flushing unit and integrated power supply, 230V AC
SLP 19RB	**11197**	Urinal Golem with a radar flushing unit, 6V

SLP 20R	**01204**	Urinal Antero with a radar flushing unit, 24V DC
SLP 20RZ	**01205**	Urinal Antero with a radar flushing unit and integrated power supply, 230V AC

SLP 23RS	**11235**	Urinal Caprino with a radar flushing unit, 24V DC
SLP 23RZ	**01235**	Urinal Caprino with a radar flushing unit and integrated power supply, 230V AC

SLP 24R	**01244**	Urinal Alessi with cover with a radar flushing unit, 24V DC
SLP 24RZ	**01245**	Urinal Alessi with cover with a radar flushing unit and integrated power supply, 230V AC

SLP 25R	**01254**	Urinal Alessi with a radar flushing unit, 24V DC
SLP 25RZ	**01255**	Urinal Alessi with a radar flushing unit and integrated power supply, 230V AC

SLP 31RS	**11315**	Urinal Livo with a radar flushing unit, 24V DC
SLP 31RZ	**01315**	Urinal Livo with a radar flushing unit and integrated power supply, 230V AC
SLP 31RB	**11317**	Urinal Livo with a radar flushing unit, 6V

SLP 32R	**01324**	Urinal Arq with cover with a radar flushing unit, 24V DC
SLP 32RZ	**01325**	Urinal Arq with cover with a radar flushing unit and integrated power supply, 230V AC
SLP 32RB	**11327**	Urinal Arq with cover with a radar flushing unit, 6V

SLP 33R	**01334**	Urinal Casa with cover with a radar flushing unit, 24V DC
SLP 33RZ	**01335**	Urinal Casa with cover with a radar flushing unit and integrated power supply, 230V AC
SLP 33RB	**11337**	Urinal Casa with cover with a radar flushing unit, 6V

SLP 35S	**11351**	Radar flushing unit on the mounting rail for urinal Roca Zoom/Inker 24V DC
SLP 35Z	**01351**	Radar flushing unit on the mounting rail for urinal Roca Zoom/Inker with integrated power supply, 230V AC
SLP 35B	**11356**	Radar flushing unit on the mounting rail for urinal Roca Zoom/Inker, 6V

SLP 35RS	**11355**	Urinal Roca Zoom with a radar flushing unit, 24V DC
SLP 35RZ	**01355**	Urinal Roca Zoom with a radar flushing unit and with integrated power supply, 230V AC
SLP 35RB	**11357**	Urinal Roca Zoom with a radar flushing unit, 6V

SLP 36RS	**11365**	Radar flushing unit on the mounting rail for urinal ECCO (Golf), 24V DC
SLP 36RZ	**01365**	Radar flushing unit on the mounting rail for urinal ECCO (Golf) with integrated power supply, 230V AC
SLP 36RB	**11367**	Radar flushing unit on the mounting rail for urinal ECCO (Golf), 6V

SLP 37R	**01374**	Urinal Vila with cover and with a radar flushing unit, 24V DC
SLP 37RZ	**01375**	Urinal Vila with cover and with a radar flushing unit and with integrated power supply, 230V AC
SLP 37RB	**11377**	Urinal Vila with cover and with a radar flushing unit, 6V

SLP 49RS	**11495**	Urinal Caprino Plus with a radar flushing unit, 24V DC
SLP 49RZ	**01495**	Urinal Caprino Plus with a radar flushing unit and integrated power supply, 230V AC
SLP 49RB	**01491**	Urinal Caprino Plus with a radar flushing unit, 6V

SLP 49S	**01493**	Radar flushing unit on the mounting rail for urinal Caprino Plus, 24V DC
SLP 49Z	**01496**	Radar flushing unit on the mounting rail for urinal Caprino Plus with integrated power supply , 230V AC
SLP 49B	**01492**	Radar flushing unit on the mounting rail for urinal Caprino Plus, 6V

SLP 54RS	**11545**	Radar flushing unit on the mounting rail for D-Code urinal, 24V DC
SLP 54RZ	**01545**	Radar flushing unit on the mounting rail for D-Code urinal with integrated power supply, 230V AC

SLP 59RS	**11596**	Urinal Lema with a radar flushing unit, 24V DC
SLP 59RZ	**01595**	Urinal Lema with a radar flushing unit and integrated power supply, 230V AC
SLP 59RB	**11597**	Urinal Lema with a radar flushing unit, 6V

SLP 59S	**01593**	Radar flushing unit on the mounting rail for urinal Lema, 24V DC
SLP 59Z	**01596**	Radar flushing unit on the mounting rail for urinal Lema with integrated power supply, 230V AC
SLP 59B	**01592**	Radar flushing unit on the mounting rail for urinal Lema, 6V

1 L	**SLP 68RS**	**11685**	Radar flushing unit on the mounting rail for urinal Architectura 557400, 24V DC
	SLP 68RZ	**01685**	Radar flushing unit on the mounting rail for urinal Architectura 557400 with integrated power supply, 230V AC
	SLP 68RB	**11687**	Radar flushing unit on the mounting rail for urinal Architectura 557400, 6V

1 L	**SLP 69RS**	**11695**	Radar flushing unit on the mounting rail for urinal Architectura 558600, 558700, 24V DC
	SLP 69RZ	**01695**	Radar flushing unit on the mounting rail for urinal Architectura 558600, 558700 with integrated power supply, 230V AC
	SLP 69RB	**11697**	Radar flushing unit on the mounting rail for urinal Architectura 558600, 558700, 6V

1 L	**SLP 70RS**	**11705**	Radar flushing unit on the mounting rail for urinal O.novo (Omnia Pro) 750700, 24V DC
	SLP 70RZ	**11706**	Radar flushing unit on the mounting rail for urinal O.novo (Omnia Pro) 750700 with integrated power supply, 230V AC
	SLP 70RB	**11707**	Radar flushing unit on the mounting rail for urinal O.novo (Omnia Pro) 750700, 6V

1 L	**SLP 71RS**	**11715**	Radar flushing unit on the mounting rail for urinal Subway 751300, 24V DC
	SLP 71RZ	**11716**	Radar flushing unit on the mounting rail for urinal Subway 751300 with integrated power supply, 230V AC
	SLP 71RB	**11717**	Radar flushing unit on the mounting rail for urinal Subway 751300, 6V

SLP 82RS	**01820**	Urianl WCA with radar flushing unit, 24V DC
SLP 82RZ	**01822**	Urinal WCA with radar flushing unit and integrated power supply, 230V AC

AUTOMATIC INFRA-RED AND PIEZO WASHBASIN TAPS

SLU 01N	**23018**	Automatic washbasin tap for cold or premixed water, 24V DC
SLU 01NB	**23019**	Automatic washbasin tap for cold or premixed water, 6V

SLU 02N	**23028**	Automatic washbasin tap for cold and hot water, 24V DC
SLU 02NB	**23029**	Automatic washbasin tap for cold and hot water, 6V
SLU 02T	**13026**	Automatic washbasin tap with thermostatic valve, 24V DC
SLU 02BT	**13023**	Automatic washbasin tap with thermostatic valve, 6V

SLU 08	**03080**	Automatic washbasin tap for cold and hot water, 24V DC
SLU 08B	**03085**	Automatic washbasin tap for cold and hot water, 6V

SLU 08D	**13081**	Automatic washbasin elongated tap for cold and hot water, 24V DC
SLU 08DB	**13082**	Automatic washbasin elongated tap for cold and hot water, 6V

SLU 08N	**23088**	Automatic washbasin mixer, 24V DC
SLU 08NB	**23089**	Automatic washbasin mixer, 6V

SLU 08ND	**63088**	Automatic washbasin elongated mixer, 24V DC
SLU 08NDB	**63089**	Automatic washbasin elongated mixer, 6V

SLU 15	**03150**	Automatic washbasin mixer, 24V DC
SLU 15B	**03155**	Automatic washbasin mixer, 6V

SLU 34	**03340**	Automatic washbasin tap for cold or premixed water, 24V DC
SLU 34B	**03345**	Automatic washbasin tap for cold or premixed water, 6V
SLU 35	**03350**	Automatic washbasin tap for cold and hot water, 24V DC
SLU 35B	**03355**	Automatic washbasin tap for cold and hot water, 6V

SLU 36	**03360**	Automatic washbasin mixer, 24V DC
SLU 36B	**03365**	Automatic washbasin mixer, 6V

SLU 37	**03370**	Automatic washbasin mixer, 24V DC
SLU 37B	**03375**	Automatic washbasin mixer, 6V

SLU 45	**03450**	Automatic stainless steel washbasin tap for cold or premixed water, 24V DC
SLU 45B	**03455**	Automatic stainless steel washbasin tap for cold or premixed water, 6V
SLU 46	**03460**	Automatic stainless steel washbasin tap for cold and hot water, 24V DC
SLU 46B	**03465**	Automatic stainless steel washbasin tap for cold and hot water, 6V

SLU 54N	**03540**	Automatic washbasin mixer, 24V DC
SLU 54NB	**03545**	Automatic washbasin mixer, 6V

SLU 60	**03600**	Automatic washbasin mixer, 24V DC
SLU 60B	**03605**	Automatic washbasin mixer, 6V

- is destined for countertop washbasins
- max. height of washbasin is 150 mm

SLU 63	**03630**	Automatic washbasin mixer, 24V DC
SLU 63B	**03635**	Automatic washbasin mixer, 6V

SLU 76	**03760**	Automatic washbasin mixer, 24V DC
SLU 76B	**03765**	Automatic washbasin mixer, 6V

SLU 83	**03830**	Automatic washbasin mixer, 24V DC
SLU 83B	**03835**	Automatic washbasin mixer, 6V

SLU 91N	**03910**	Automatic stainless steel washbasin tap for cold or premixed water, 24V DC
SLU 91NB	**03915**	Automatic stainless steel washbasin tap for cold or premixed water, 6V
SLU 93N	**03930**	Automatic stainless steel washbasin tap for cold and hot water, 24V
SLU 93NB	**03935**	Automatic stainless steel washbasin tap for cold and hot water, 6V

SLU 91ND	**13911**	Automatic stainless steel washbasin tap for cold or premixed water, longer spout, 24V DC
SLU 91NDB	**13912**	Automatic stainless steel washbasin tap for cold or premixed water, longer spout, 6V
SLU 93ND	**13931**	Automatic stainless steel washbasin tap for cold and hot water, longer spout, 24V DC
SLU 93NDB	**13932**	Automatic stainless steel washbasin tap for cold and hot water, longer spout, 6V

SLU 92N	**03920**	Automatic stainless steel washbasin mixer, 24V DC
SLU 92NB	**03925**	Automatic stainless steel washbasin mixer, 6V

SLU 92ND	**13921**	Automatic stainless steel washbasin mixer, longer spout, 24V DC
SLU 92NDB	**13922**	Automatic stainless steel washbasin mixer, longer spout, 6V

SLU 91NP	**43919**	Piezo stainless steel washbasin tap for cold or premixed water, 24V DC
SLU 91NPB	**64911**	Piezo stainless steel washbasin tap for cold or premixed water, 6V
SLU 93NP	**43939**	Piezo stainless steel washbasin tap for cold and hot water, 24V DC
SLU 93NPB	**64931**	Piezo stainless steel washbasin tap for cold and hot water, 6V

SLU 91NPD	**64912**	Piezo stainless steel washbasin tap for cold or premixed water, longer spout, 24V DC
SLU 91NPDB	**64913**	Piezo stainless steel washbasin tap for cold or premixed water, longer spout, 6V
SLU 93NPD	**64932**	Piezo stainless steel washbasin tap for cold and hot water, longer spout, 24V DC
SLU 93NPDB	**64933**	Piezo stainless steel washbasin tap for cold and hot water, longer spout, 6V

SLU 92NP	**43929**	Piezo stainless steel washbasin mixer, 24V DC
SLU 92NPB	**64921**	Piezo stainless steel washbasin mixer, 6V

SLU 92NPD	**64922**	Piezo stainless steel washbasin mixer, longer spout, 24V DC
SLU 92NPDB	**64923**	Piezo stainless steel washbasin mixer, longer spout, 6V

AUTOMATIC INFRA-RED SINK TAPS

SLU 03D	**13031**	Automatic washbasin and sink mixer with elongated spout, 24V DC
SLU 03DB	**13032**	Automatic washbasin and sink mixer with elongated spout, 9V

SLU 10	**03100**	Automatic washbasin and sink tap for double sink with swivel spout, 24V DC
SLU 10B	**03105**	Automatic washbasin and sink tap for double sink with swivel spout, 9V

SLU 23D	**13231**	Automatic washbasin and sink mixer with elongated spout, 24V DC
SLU 23DB	**13232**	Automatic washbasin and sink mixer with elongated spout, 9V

SLU 24D	**13241**	Automatic washbasin and sink thermostatic mixer with elongated spout, 24V DC
SLU 24DB	**13242**	Automatic washbasin and sink thermostatic mixer with elongated spout, 9V

AUTOMATIC INFRA-RED AND PIEZO WALL-MOUNTED WASHBASIN TAPS

SLU 04H17	**03041**	Automatic wall-mounted washbasin tap for cold or premixed water, spout of 170 mm, 24V DC
SLU 04H17B	**03046**	Automatic wall-mounted washbasin tap for cold or premixed water, spout of 170 mm, 6V
SLU 04H25	**03042**	Automatic wall-mounted washbasin tap for cold or premixed water, spout of 250 mm, 24V DC
SLU 04H25B	**03047**	Automatic wall-mounted washbasin tap for cold or premixed water, spout of 250 mm, 6V

SLU 04P17	**53041**	Piezo wall-mounted washbasin tap for cold or premixed water, spout of 170 mm, 24V DC
SLU 04P17B	**53043**	Piezo wall-mounted washbasin tap for cold or premixed water, spout of 170 mm, 6V
SLU 04P25	**53042**	Piezo wall-mounted washbasin tap for cold or premixed water, spout of 250 mm, 24V DC
SLU 04P25B	**53044**	Piezo wall-mounted washbasin tap for cold or premixed water, spout of 250 mm, 6V

SLU 04HT17	**43046**	Automatic wall-mounted thermostatic washbasin mixer, spout of 170 mm, 24V DC
SLU 04HT17B	**65043**	Automatic wall-mounted thermostatic washbasin mixer, spout of 170 mm, 6V
SLU 04HT25	**43047**	Automatic wall-mounted thermostatic washbasin mixer, spout of 250 mm, 24V DC
SLU 04HT25B	**65044**	Automatic wall-mounted thermostatic washbasin mixer, spout of 250 mm, 6V

SLU 09PTB	**13091**	Piezo wall-mounted washbasin tap with thermostatic valve and with special „Anti-suicidal“ spout, 6V

SLU 25	**03250**	Automatic wall-mounted thermostatic washbasin mixer, 24V DC
SLU 25B	**03255**	Automatic wall-mounted thermostatic washbasin mixer, 9V

SLU 25S	**33258**	Automatic wall-mounted thermostatic washbasin mixer, 24V DC
SLU 25SB	**33259**	Automatic wall-mounted thermostatic washbasin mixer, 9V

SLU 39	**03390**	Automatic wall-mounted stainless steel washbasin tap for cold or premixed water for subsequent mounting, polished, 24V DC
SLU 39B	**03392**	Automatic wall-mounted stainless steel washbasin tap for cold or premixed water for subsequent mounting, polished, 6V
SLU 39X	**03391**	Automatic wall-mounted stainless steel washbasin tap for cold or premixed water for subsequent mounting, brushed, 24V DC
SLU 39BX	**03393**	Automatic wall-mounted stainless steel washbasin tap for cold or premixed water for subsequent mounting, brushed, 6V

SLU 39PX	**03394**	Piezo wall-mounted stainless steel washbasin tap for cold or premixed water for subsequent mounting, brushed, 24V DC
SLU 39PBX	**03395**	Piezo wall-mounted stainless steel washbasin tap for cold or premixed water for subsequent mounting, brushed, 6V

SLA 52A	**06520**	Set of parts for mounting into the wall for SLU 39, SLU 39X
SLA 52B	**06521**	Set of parts for mounting into the wall for SLU 39P, SLU 39PX

SLU 43B	**03435**	Automatic wall-mounted stainless steel washbasin tap for cold or premixed water, 6V

SLU 42KB	**03425**	Automatic wall-mounted washbasin mixer, chrome-plated, 6V

SLU 43KB	**03431**	Automatic wall-mounted washbasin tap for cold or premixed water, chrome-plated, 6V

SLU 44P	**43449**	Automatic wall-mounted washbasin tap for cold or premixed water with a vandal-proof cover and with „Anti-suicidal“ spout, 24V DC
SLU 44PB	**64441**	Automatic wall-mounted washbasin tap for cold or premixed water with a vandal-proof cover and with „Anti-suicidal“ spout, 6V

SLU 44PP	**64442**	Automatic wall-mounted tap for hot and cold water with a vandal-proof cover and with „Anti-suicidal“ spout, 24V DC

- mutual blocking of the piezo buttons

AUTOMATIC WASHBASIN TAPS WITH INTEGRATED SOAP DISPENSER AND AUTOMATIC SOAP DISPENSER

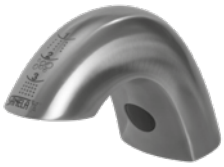

SLU 45MD	**03466**	Automatic stainless steel washbasin tap for cold or premixed water, with integrated automatic soap dispenser, 1 l soap canister, 230V AC
SLU 46MD	**03467**	Automatic stainless steel washbasin tap for hot and cold water, with integrated automatic soap dispenser, 1 l soap canister, 230V AC

SLU 45M2	**03453**	Set of 2 pcs. automatic stainless steel washbasin taps for cold or premixed water, with integrated automatic soap dispenser, 6 l central soap canister, 230V AC
SLU 45M3	**03454**	Set of 3 pcs. automatic stainless steel washbasin taps for cold or premixed water, with integrated automatic soap dispenser, 6 l central soap canister, 230V AC
SLU 45M4	**03456**	Set of 4 pcs. automatic stainless steel washbasin taps for cold or premixed water, with integrated automatic soap dispenser, 6 l central soap canister, 230V AC
SLU 45M5	**03457**	Set of 5 pcs. automatic stainless steel washbasin taps for cold or premixed water, with integrated automatic soap dispenser, 6 l central soap canister, 230V AC
SLU 45M6	**03458**	Set of 6 pcs. automatic stainless steel washbasin taps for cold or premixed water, with integrated automatic soap dispenser, 6 l central soap canister, 230V AC

SLZN 83E	**85831**	Automatic stainless steel wall-mounted soap dispenser, 1 l soap canister, 230V AC

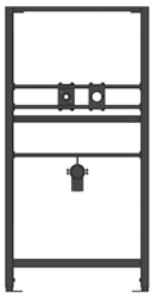

SLZN 83ER	**85838**	Automatic stainless steel wall-mounted soap dispenser, 1 l soap canister, mounting frame SLR 24 included, 230V AC

SLZN 83E2	**85832**	Set of 2 pcs. automatic stainless steel wall-mounted soap dispensers, 6 l central soap canister, 230V AC
SLZN 83E3	**85833**	Set of 3 pcs. automatic stainless steel wall-mounted soap dispensers, 6 l central soap canister, 230V AC
SLZN 83E4	**85834**	Set of 4 pcs. automatic stainless steel wall-mounted soap dispensers, 6 l central soap canister, 230V AC
SLZN 83E5	**85835**	Set of 5 pcs. automatic stainless steel wall-mounted soap dispensers, 6 l central soap canister, 230V AC
SLZN 83E6	**85836**	Set of 6 pcs. automatic stainless steel wall-mounted soap dispensers, 6 l central soap canister, 230V AC

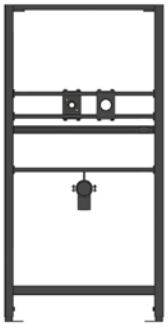

SLZN 83ER2	**85812**	Set of 2 pcs. automatic stainless steel wall-mounted soap dispensers, 6 l central soap canister, mounting frame SLR 24 included, 230V AC
SLZN 83ER3	**85813**	Set of 3 pcs. automatic stainless steel wall-mounted soap dispensers, 6 l central soap canister, mounting frame SLR 24 included, 230V AC
SLZN 83ER4	**85814**	Set of 4 pcs. automatic stainless steel wall-mounted soap dispensers, 6 l central soap canister, mounting frame SLR 24 included, 230V AC
SLZN 83ER5	**85815**	Set of 5 pcs. automatic stainless steel wall-mounted soap dispensers, 6 l central soap canister, mounting frame SLR 24 included, 230V AC
SLZN 83ER6	**85816**	Set of 6 pcs. automatic stainless steel wall-mounted soap dispensers, 6 l central soap canister, mounting frame SLR 24 included, 230V AC

SLZN 91E	**85911**	Automatic stainless steel countertop soap dispenser, 1 l soap canister, 230V AC

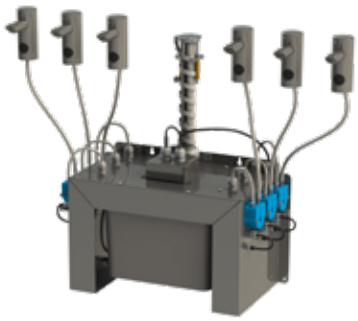

SLZN 91E2	**85912**	Set of 2 pcs. automatic stainless steel countertop soap dispensers, 6 l central soap canister, 230V AC
SLZN 91E3	**85913**	Set of 3 pcs. automatic stainless steel countertop soap dispensers, 6 l central soap canister, 230V AC
SLZN 91E4	**85914**	Set of 4 pcs. automatic stainless steel countertop soap dispensers, 6 l central soap canister, 230V AC
SLZN 91E5	**85915**	Set of 5 pcs. automatic stainless steel countertop soap dispensers, 6 l central soap canister, 230V AC
SLZN 91E6	**85916**	Set of 6 pcs. automatic stainless steel countertop soap dispensers, 6 l central soap canister, 230V AC

SLDN 08E **72081** Automatic liquid soap and gel disinfection dispenser, volume 1 l, white plastic ABS, 6V

SLZN 71E **85717** Automatic stainless steel liquid soap and disinfection dispenser, inner plastic container, volume 0,85 l, brushed, 4,5V

SLZN 72E	**85727**	Automatic stainless steel foam soap dispenser, volume 0,85 l, brushed, 6V

AUTOMATIC INFRA-RED AND PIEZO SHOWER CONTROLS

SLS 01AK	**02012**	Automatic shower control for cold or premixed water, 24V DC
SLS 01AKB	**12017**	Automatic shower control for cold or premixed water, 6V

SLS 01N	**22012**	Automatic shower control for cold or premixed water, 24V DC
SLS 01NB	**22013**	Automatic shower control for cold or premixed water, 6V

SLS 01P	**12012**	Piezo shower control for cold or premixed water, 24V DC
SLS 01PB	**12013**	Piezo shower control for cold or premixed water, 6V

SLS 01NP	**22016**	Piezo shower control for cold or premixed water, 24V DC
SLS 01NPB	**22017**	Piezo shower control for cold or premixed water, 6V

SLS 01PA	**12016**	Piezo shower control for cold or premixed water, with vandal-proof cover, 24V DC

SLS 02	**02020**	Automatic shower control with mixer, 24V DC
SLS 02B	**02026**	Automatic shower control with mixer, 6V

SLS 02T	**02023**	Automatic shower control with thermostatic mixer, 24V DC
SLS 02TB	**02027**	Automatic shower control with thermostatic mixer, 6V

SLS 02P	**12022**	Piezo shower control with mixer for cold and hot water, 24V DC
SLS 02PB	**12023**	Piezo shower control with mixer for cold and hot water, 6V

SLS 02PT	**12024**	Piezo shower control with thermostatic mixer, 24V DC
SLS 02PTB	**12025**	Piezo shower control with thermostatic mixer, 6V

SLS 03	**02030**	Automatic wall-mounted shower control with thermostatic mixer, upper outlet, 24V DC
SLS 03B	**02036**	Automatic wall-mounted shower control with thermostatic mixer, upper outlet, 9V

SLS 03S	**02038**	Automatic wall-mounted shower control with thermostatic mixer, bottom outlet, 24V DC
SLS 03SB	**22031**	Automatic wall-mounted shower control with thermostatic mixer, bottom outlet, 9V

SLS 30B	**02300**	Electronic touch shower control for cold or premixed water, glass cover colour REF 9006 light grey, cyan backlight of the symbol, 24V DC
SLS 30C	**02301**	Electronic touch shower control for cold or premixed water, glass cover colour REF 7016 dark grey, white backlight of the symbol, 24V DC
SLS 30D	**02302**	Electronic touch shower control for cold or premixed water, glass cover colour REF 0337 metallic black, white backlight of the symbol, 24V DC
SLS 30E	**02303**	Electronic touch shower control for cold or premixed water, glass cover colour REF 9005 black, white backlight of the symbol, 24V DC

AUTOMATIC INFRA-RED, PIEZO AND MECHANICAL TOILET FLUSHING UNITS

SLW 01NK	**04015**	Automatic toilet flushing unit for pressured water, 24V DC
SLW 01NKB	**04017**	Automatic toilet flushing unit for pressured water, 6V

SLW 01P	**14015**	Piezo toilet flushing unit for pressured water, 24V DC
SLW 01PB	**14010**	Piezo toilet flushing unit for pressured water, 6V

SLW 01PA **14016** Piezo toilet flushing unit for pressured water with vandal-proof cover, 24V DC

SLW 03PA **14036** Piezo toilet flushing unit for pressured water with vandal-proof cover, with distant control, 24V DC

SLW 02PA **14026** Piezo toilet flushing unit with vandal-proof cover, including the frame SLR 21, 24V DC

SLW 04PA **14046** Piezo toilet flushing unit with vandal-proof cover, with distant control, including the frame SLR 21, 24V DC

SLW 10NK	**04101**	Set of SLW 01NK and SLR 03, 24V DC
SLW 10NKB	**04102**	Set of SLW 01NKB and SLR 03, 6V

SLW 10P	**04103**	Set of SLW 01P and SLR 03, 24V DC
SLW 10PB	**04104**	Set of SLW 01PB and SLR 03, 6V
SLW 10PA	**04105**	Set of SLW 01PA and SLR 03, 24V DC

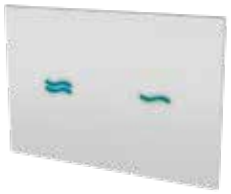

SLW 30A	**04300**	Electronic touch toilet flushing unit for installation system SLR 21, glass cover colour REF 1502 white, blue backlight of the symbols, 24V DC

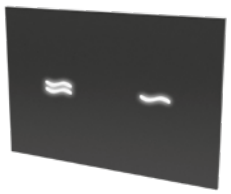

SLW 30E	**04301**	Electronic touch toilet flushing unit for installation system SLR 21, glass cover colour REF 9005 black, white backlight of the symbols, 24V DC
SLW 30F	**04302**	Electronic touch toilet flushing unit for installation system SLR 21, glass cover colour REF 9005 black, blue backlight of the symbols, 24V DC

SLW 02A	**04026**	Automatic toilet flushing unit for installation system SLR 21, white plastic, 24V DC
SLW 02F	**04027**	Automatic toilet flushing unit for installation system SLR 21, black plastic, 24V DC

SLW 50	**04500**	Mechanical toilet flushing unit for installation system SLR 21, white plastic
SLW 51	**04510**	Mechanical toilet flushing unit for installation system SLR 21, polished chrome
SLW 52	**04520**	Mechanical toilet flushing unit for installation system SLR 21, brushed chrome
SLW 53	**04530**	Mechanical toilet flushing unit for installation system SLR 21, black plastic

STAINLESS STEEL WASHBASINS

SLUN 01 **93010** Stainless steel washbasin with tap hole

- siphon, overflow and mounting set included, brushed finish

SLUN 02 **93020** Stainless steel washbasin with tap hole

- back-splash, siphon, overflow and mounting set included, brushed finish

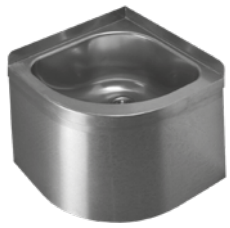

SLUN 11 **93110** Stainless steel corner washbasin

- siphon and mounting set included, brushed finish
- tap hole could be made to order

SLUN 13 **93130** Stainless steel washbasin

- siphon and mounting set included, brushed finish
- tap hole could be made to order

SLUN 17 **93170** Stainless steel washbasin

- siphon and mounting set included, brushed finish
- tap hole could be made to order

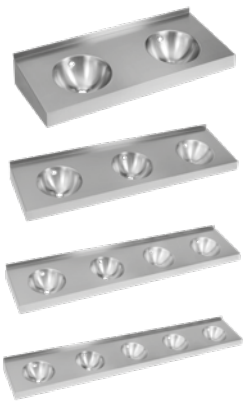

SLUN 19	**93190**	Stainless steel double washbasin, 1200 x 5000 mm
SLUN 20	**93200**	Stainless steel triple washbasin, 1800 x 500 mm
SLUN 60	**93600**	Stainless steel washbasin (4 washing places), 2400 x 500 mm
SLUN 61	**93610**	Stainless steel washbasin (5 washing places), 3000 x 500 mm

- siphon, overflow and mounting set included, brushed finish
- different lengths, tap holes and holes for recessed liquid soap dispensers could be made to order

SLUN 19P	**93197**	Stainless steel double washbasin with sheating, 1200 x 500 mm
SLUN 20P	**93207**	Stainless steel triple washbasin with sheating, 1800 x 500 mm
SLUN 60P	**93607**	Stainless steel washbasin with sheating (4 washing places), 2400 x 500 mm
SLUN 61P	**93617**	Stainless steel washbasin with sheating(5 washing places), 3000 x 500 mm

- siphon, overflow and mounting set included, brushed finish
- different lengths, tap holes and holes for recessed liquid soap dispensers could be made to order

SLUN 22M **83226** Vandal-proof stainless steel washbasin, Ø 320 mm

- stainless steel waste tube and M10 screws included, brushed finish
- rear assembling by M10 screws from the service room

SLUN 24X **93241** Stainless steel recessed washbasin

- siphon, overflow and mounting set included, brushed finish

SLUN 25X **93251** Stainless steel recessed washbasin with tap hole

- siphon, overflow and mounting set included, brushed finish

SLUN 26 **93260** Stainless steel washbasin with tap hole

- rounded corners and edges
- siphon, overflow set with drain and plug and mounting set included, brushed finish

SLUN 26A **73262** Stainless steel washbasin without tap hole

- rounded corners and edges
- siphon, overflow set with drain and plug and mounting set included, brushed finish

SLUN 28A **73282** Stainless steel recessed washbasin with tap hole, Ø 360 mm

- siphon, overflow and mounting set included, polished finish

---

SLUN 32	**93320**	Stainless steel recessed washbasin with tap hole
SLUN 32X	**93328**	Stainless steel recessed washbasin with tap hole

- siphon, overflow and mounting set included
- high polished finish (SLUN 32), brushed finish (SLUN 32X)

SLUN 34 **93340** Stainless steel recessed washbasin, Ø 420 mm

- siphon and overflow set included
- assembling by glue, brushed finish

SLUN 36A **73362** Stainless steel washbasin with tap hole

- siphon, overflow and mounting set included, brushed finish

SLUN 41M **83416** Vandal-proof stainless steel corner washbasin, Ø 320 mm

- stainless steel waste tube and M10 screws included, brushed finish
- rear assembling by M10 screws from the service room

SLUN 44	**93440**	Stainless steel recessed washbasin, Ø 320 mm
SLUN 44X	**93448**	Stainless steel recessed washbasin, Ø 320 mm

- siphon, overflow and mounting set included, polished finish (SLUN 44), brushed finish (SLUN 44X)

SLUN 45	**93450**	Stainless steel recessed washbasin, Ø 360 mm
SLUN 45X	**93458**	Stainless steel recessed washbasin, Ø 360 mm

- siphon, overflow and mounting set included, polished finish (SLUN 45), brushed finish (SLUN 45X)

SLUN 47	**93470**	Stainless steel washbasin for disabled people
SLUN 47X	**93478**	Stainless steel washbasin for disabled people

- special siphon and mounting set included, polished finish (SLUN 47), brushed finish (SLUN 47X)
- tap hole could be made to order

SLUN 57	**93570**	Stainless steel floor standing washbasin with sheating, fixed to the wall

- siphon and mounting set included, brushed finish
- tap hole could be made to order

SLUN 58	**93580**	Vandal-proof stainless steel washbasin, Ø 320 mm

- siphon and mounting set included, brushed finish
- assembling through the service hatch with special screws
- tap hole could be made to order

SLUN 59	**93590**	Vandal-proof stainless steel washbasin, Ø 360 mm

- siphon and mounting set included, brushed finish
- assembling through the service hatch with special screws
- tap hole could be made to order

SLUN 64	**93640**	Stainless steel wall hung rectangular washbasin

- siphon, overflow and mounting set included, brushed finish
- tap hole could be made to order (placed in the corner)

SLUN 65 **93650** Stainless steel wall hung square washbasin

- siphon, overflow and mounting set included, brushed finish
- tap hole could be made to order

SLUN 66 **93660** Stainless steel washbasin for disabled people

- siphon, overflow and mounting set included, brushed finish
- tap hole could be made to order

SLUN 68 **93680** Design stainless steel wall hung washbasin

- siphon and mounting set included, brushed finish
- this washbasin could be installed only with wall-mounted tap

---

SLUN 69 **73690** Vandal-proof stainless steel washbasin

- siphon and mounting set included, brushed finish
- tap hole could be made to order

SLUN 70H **73701** Vandal-proof stainless steel piezo multifunctional washbasin, 230V AC

- automatic soap dispenser, automatic water spout and automatic hand dryer in one
- siphon and M10 srews included, brushed finish
- rear assembling by M10 screws from the service room

SLUN 70P **73703** Vandal-proof stainless steel piezo multifunctional washbasin, 230V AC

- automatic soap dispenser, automatic water spout and automatic hand dryer in one
- siphon included, brushed finish
- assembling through the service hatch

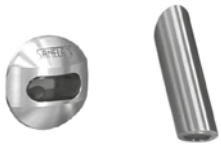

Detail of electronics with spout Anti-suicidal

SLUN 71E	**93711**	Vandal-proof stainless steel automatic wall-mounted washbasin, for cold or premixed water, 24V DC
SLUN 71EB	**93712**	Vandal-proof stainless steel automatic wall-mounted washbasin, for cold or premixed water, 6V
SLUN 72E	**93721**	Vandal-proof stainless steel automatic wall-mounted washbasin, for cold and hot water, 24V DC
SLUN 72EB	**93722**	Vandal-proof stainless steel automatic wall-mounted washbasin, for cold and hot water, 6V
SLUN 72ET	**93723**	Vandal-proof stainless steel automatic wall-mounted washbasin, for cold and hot water, with thermostatic valve, 24V DC
SLUN 72ETB	**93724**	Vandal-proof stainless steel automatic wall-mounted washbasin, for cold and hot water, with thermostatic valve, 6V

- spout "Anti-suicidal", siphon and mounting set included, brushed finish
- assembling through the service hatch

Detail of piezo button with spout Anti-suicidal

SLUN 71P	**93717**	Vandal-proof stainless steel piezo wall-mounted washbasin, for cold or premixed water, 24V DC
SLUN 71PB	**73716**	Vandal-proof stainless steel piezo wall-mounted washbasin, for cold or premixed water, 6V
SLUN 72P	**93727**	Vandal-proof stainless steel piezo wall-mounted washbasin, for cold and hot water, 24V DC
SLUN 72PB	**73726**	Vandal-proof stainless steel piezo wall-mounted washbasin, for cold and hot water, 6V
SLUN 72PT	**73727**	Vandal-proof stainless steel piezo wall-mounted washbasin, for cold and hot water, with thermostatic valve, 24V DC
SLUN 72PTB	**73728**	Vandal-proof stainless steel piezo wall-mounted washbasin, for cold and hotwater, with thermostatic valve, 6V

- spout "Anti-suicidal", siphon and mounting set included, brushed finish
- assembling through the service hatch

SLUN 75E	**93751**	Vandal-proof stainless steel automatic recessed washbasin, for cold or premixed water, 24V DC
SLUN 75EB	**93752**	Vandal-proof stainless steel automatic recessed washbasin, for cold or premixed water, 6V
SLUN 76E	**93761**	Vandal-proof stainless steel automatic recessed washbasin, for cold and hot water, 24V DC
SLUN 76EB	**93762**	Vandal-proof stainless steel automatic recessed washbasin, for cold and hot water, 6V
SLUN 76ET	**93763**	Vandal-proof stainless steel automatic recessed washbasin, for cold and hot water, with thermostatic valve, 24V DC
SLUN 76ETB	**93764**	Vandal-proof stainless steel automatic recessed washbasin, for cold and hot water, with thermostatic valve, 6V

- siphon, M10 screws and mounting set included, brushed finish
- rear assembling by M10 screws from the service room

STAINLESS STEEL DRINKING FOUNTAINS

SLUN 14	**93140**	Stainless steel wall hung drinking fountain

- siphon, mounting set included, polished finish

SLUN 14E	**93141**	Stainless steel wall hung automatic drinking fountain, 24V DC
SLUN 14EB	**93142**	Stainless steel wall hung automatic drinking fountain, 6V

- siphon, mounting set included, polished finish

SLUN 23	**93230**	Stainless steel floor mounted drinking fountain, height 800 mm
SLUN 23M	**83236**	Stainless steel floor mounted drinking fountain, height 650 mm

- siphon and mounting set included
- inner bowl - high polished finish, sheating - brushed finish

SLUN 23E	**93231**	Stainless steel floor mounted automatic drinking fountain, 24V DC
SLUN 23EB	**93232**	Stainless steel floor mounted automatic drinking fountain, 6V

- siphon and mounting set included
- inner bowl - high polished finish, sheating - brushed finish

SLUN 43	**93430**	Stainless steel floor mounted drinking fountain
SLUN 43C	**83438**	Stainless steel floor mounted drinking fountain with cooler

- siphon and mounting set included
- inner bowl - high polished finish, sheating - brushed finish

SLUN 43S	**83435**	Stainless steel floor mounted drinking fountain with bottle filler
SLUN 43CS	**83439**	Stainless steel floor mounted drinking fountain with bottle filler and cooler

- siphon and mounting set included
- inner bowl - high polished finish, sheating - brushed finish

SLUN 43E	**83437**	Stainless steel floor mounted automatic drinking fountain, 24V DC
SLUN 43EB	**83436**	Stainless steel floor mounted automatic drinking fountain, 6V

- siphon and mounting set included
- inner bowl - high polished finish, sheating - brushed finish

SLUN 62	**93620**	Stainless steel wall hung drinking fountain

- siphon and mounting set included, brushed finish

SLUN 62E	**93621**	Stainless steel wall hung automatic drinking fountain, 24V DC
SLUN 62EB	**93622**	Stainless steel wall hung automatic drinking fountain, 6V

- siphon and mounting set included, brushed finish

SLUN 62S	**83625**	Stainless steel wall hung drinking fountain with bottle filler

- siphon and mounting set included, brushed finish

STAINLESS STEEL WASHING TROUGHS

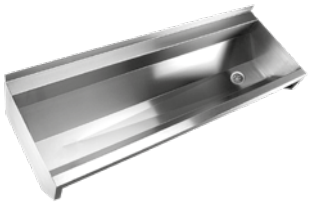

SLUN 10	**93100**	Stainless steel trough without a sheating, from AISI 304, 1250 mm
SLUN 10L	**73103**	Stainless steel trough without a sheating, from AISI 316L, 1250 mm

- siphon and mounting set included, brushed finish
- different lengths and tap holes could be made to order
- siphon hole is standardly on the right side (could be changed to order)

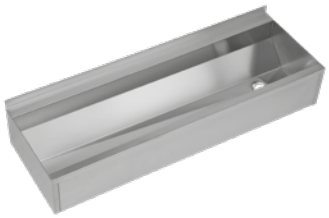

SLUN 10P	**93107**	Stainless steel trough with a sheating, from AISI 304, 1250 mm
SLUN 10PL	**73104**	Stainless steel trough with a sheating, from AISI 316L, 1250 mm

- siphon and mounting set included, brushed finish
- different lengths and tap holes could be made to order
- siphon hole is standardly on the right side (could be changed to order)

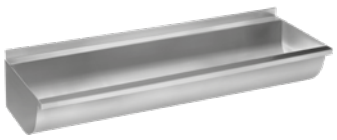

SLUN 10K	**93109**	Stainless steel rounded trough without a sheating, from AISI 304, 1250 mm
SLUN 10KL	**73105**	Stainless steel rounded trough without a sheating, from AISI 316L,1250 mm

- siphon and mounting set included, brushed finish
- different lengths and tap holes could be made to order
- siphon hole is standardly on the right side (could be changed to order)

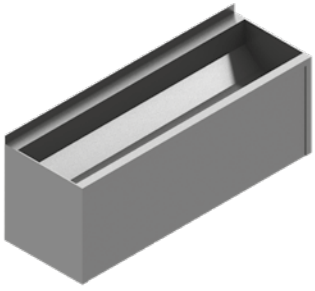

SLUN 10PA	**73109**	Stainless steel vandal-proof trough with a sheating, from AISI 304, 1250 mm

- siphon and mounting set included, brushed finish
- assembling through two service hatches
- different lengths and tap holes could be made to order
- siphon hole is standardly on the right side (could be changed to order)
- could be made to order from stainless steel AISI - 316L

Detail of electronics with stainless steel spout

SLUN 50EA	**93502**	Vandal-proof stainless steel trough with 2 integrated infra-red electronics, length 1250 mm, 24V DC

- vandal-proof stainless steel spouts and sensing heads
- siphon included, brushed finish
- assembling through two service hatches
- different lengths could be made to order
- siphon hole is standardly on the right side (could be changed to order)
- could be made to order from stainless steel AISI - 316L

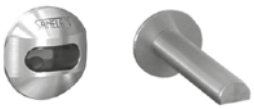

Detail of electronics with stainless steel spout

SLUN 50E	**93501**	Stainless steel trough with 2 integrated infra-red electronics, length 1250 mm, 24V DC
SLUN 51E	**93511**	Stainless steel trough with 3 integrated infra-red electronics, length 1900 mm, 24V DC
SLUN 52E	**93521**	Stainless steel trough with 4 integrated infra-red electronics, length 2500 mm, 24V DC
SLUN 53E	**93531**	Stainless steel trough with 5 integrated infra-red electronics, length 3000 mm, 24V DC
SLUN 50ET	**93503**	Stainless steel trough with 2 integrated infra-red electronics, thermostatic valve, length 1250 mm, 24V DC
SLUN 51ET	**93513**	Stainless steel trough with 3 integrated infra-red electronics, thermostatic valve, length 1900 mm, 24V DC
SLUN 52ET	**93523**	Stainless steel trough with 4 integrated infra-red electronics, thermostatic valve, length 2500 mm, 24V DC
SLUN 53ET	**93533**	Stainless steel trough with 5 integrated infra-red electronics, thermostatic valve, length 3000 mm, 24V DC

- vandal-proof stainless steel spouts and sensing heads
- siphon included, brushed finish
- different lengths could be made to order
- siphon hole is standardly on the right side (could be changed to order)
- could be made to order from stainless steel AISI - 316L

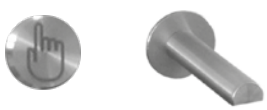

Detail of electronics with stainless steel spout

SLUN 50PA	**93505**	Vandal-proof stainless steel trough with 2 integrated piezo electronics, length 1250 mm, service hatch, brushed, 24V DC

- vandal-proof stainless steel spouts
- siphon included, brushed finish
- assembling through two service hatches
- different lengths could be made to order
- siphon hole is standardly on the right side (could be changed to order)
- could be made to order from stainless steel AISI - 316L

SLUN 54	**93540**	Stainless steel trough for hospitals, AISI 304, length 750 mm
SLUN 54L	**93541**	Stainless steel trough for hospitals, AISI 316L, length 750 mm
SLUN 55	**93550**	Stainless steel trough for hospitals, AISI 304, length 1500 mm
SLUN 55L	**93551**	Stainless steel trough for hospitals, AISI 316L, length 1500 mm
SLUN 56	**93560**	Stainless steel trough for hospitals, AISI 304, length 2250 mm
SLUN 56L	**93561**	Stainless steel trough for hospitals, AISI 316L, length 2250 mm

- siphon and mounting set included, brushed finish
- different lengths could be made to order
- siphon hole is standardly on the right side (could be changed to order)

Detail of electronics with stainless steel spout

SLUN 80EA	**93802**	Vandal-proof stainless steel wall hung trough with 2 integrated infra-red electronics, length 1250 mm, 24V DC

- vandal-proof stainless steel spouts and sensing heads
- siphon included, brushed finish
- assembling through two service hatches
- different lengths could be made to order
- siphon hole is standardly on the right side (could be changed to order)
- could be made to order from stainless steel AISI - 316L

Detail of electronics with stainless steel spout

SLUN 80E	**93801**	Stainless steel wall hung trough with 2 infra-red integrated electronics, length 1250 mm, 24V DC
SLUN 81E	**93811**	Stainless steel wall hung trough with 3 infra-red integrated electronics, length 1900 mm, 24V DC
SLUN 82E	**93821**	Stainless steel wall hung trough with 4 infra-red integrated electronics, length 2500 mm, 24V DC
SLUN 83E	**93831**	Stainless steel wall hung trough with 5 infra-red integrated electronics, length 3000 mm, 24V DC
SLUN 80ET	**93803**	Stainless steel wall hung trough with 2 infra-red integrated electronics, thermostatic valve, length 1250 mm, 24V DC
SLUN 81ET	**93813**	Stainless steel wall hung trough with 3 infra-red integrated electronics, thermostatic valve, length 1900 mm, 24V DC
SLUN 82ET	**93823**	Stainless steel wall hung trough with 4 infra-red integrated electronics, thermostatic valve, length 2500 mm, 24V DC
SLUN 83ET	**93833**	Stainless steel wall hung trough with 5 infra-red integrated electronics, thermostatic valve, length 3000 mm, 24V DC

- vandal-proof stainless steel spouts and sensing heads
- siphon included, brushed finish
- different lengths could be made to order
- siphon hole is standardly on the right side (could be changed to order)
- could be made to order from stainless steel AISI - 316L

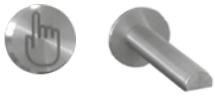

Detail of electronics with stainless steel spout

SLUN 80PA	**93800**	Vandal-proof stainless steel wall hung trough with 2 integrated piezo electronics, length 1250 mm, 24V DC

- vandal-proof stainless steel spouts
- siphon included, brushed finish
- assembling through two service hatches
- different lengths could be made to order
- siphon hole is standardly on the right side (could be changed to order)
- could be made to order from stainless steel AISI - 316L

STAINLESS STEEL SINKS

SLUN 03	**93030**	Stainless steel sink with a sheating

- siphon and mounting set included, brushed finish
- tap hole could be made to order

Detail of electronics with stainless steel spout

SLUN 04E	**93041**	Stainless steel sink with infra-red integrated electronics, 24V DC
SLUN 04EB	**93042**	Stainless steel sink with infra-red integrated electronics, 6V

- vandal-proof stainless steel spouts and sensing heads
- siphon and mounting set included, brushed finish

Detail of electronics with stainless steel spout

SLUN 04ET	**93043**	Stainless steel sink with infra-red integrated electronics, thermostatic mixer, 24V DC
SLUN 04ETB	**93044**	Stainless steel sink with infra-red integrated electronics, thermostatic mixer, 6V

- vandal-proof stainless steel spouts and sensing heads
- siphon and mounting set included, brushed finish

SLUN 06	**93060**	Stainless steel double sink with a sheating

- siphon and mounting set included, brushed finish
- tap hole could be made to order

SLUN 06EX	**93065**	Stainless steel double sink with a sheating and with SLU 10, 24V DC
SLUN 06EXB	**93066**	Stainless steel double sink with a sheating and with SLU 10B, 9V

- siphon and mounting set included, brushed finish

Detail of electronics with stainless steel spout

SLUN 07E	**93071**	Stainless steel double sink with infra-red integrated electronics, 24V DC
SLUN 07EB	**93072**	Stainless steel double sink with infra-red integrated electronics, 6V

- vandal-proof stainless steel spouts and sensing heads
- siphon and mounting set included, brushed finish

Detail of electronics with stainless steel spout

SLUN 07ET	**93073**	Stainless steel wall hung double sink with infra-red integrated electronics, thermostatic mixer, 24V DC
SLUN 07ETB	**93074**	Stainless steel wall hung double sink with infra-red integrated electronics, thermostatic mixer, 6V

- vandal-proof stainless steel spouts and sensing heads
- siphon and mounting set included, brushed finish

SLUN 15 **93150** Stainless steel floor standing bulk sink, 700 x 700 x 850 mm

- siphon included, brushed finish
- tap hole could be made to order
- possibility of fine plane regulation by the screws on the supporting legs
- different dimensions could be made to order

SLUN 16 **93160** Stainless steel floor standing double bulk sink, 1200 x 700 x 850 mm

- siphon included, brushed finish
- tap hole could be made to order
- possibility of fine plane regulation by the screws on the supporting legs
- different dimensions could be made to order

STAINLESS STEEL WORKING AND WASHING TABLES, FURNITURE

- could by made to order in different modifications

- all-stainless steel design according to EN 1.4301 (AISI 304) or EN 1.4404 (AISI 316L)
- seamless working desks
- perimeter sheating

- possible to order in colour design according to RAL shade
- sink in different modifications
- all-extensible design drawers

- possibility of a mobile version of the products
- inner cabinet content could be made to order (shelf fixed, adjustable)
- reinforcement of working desk (desk covered with laminate)

STAINLESS STEEL URINALS

SLPN 06	**91060**	Vandal proof stainless steel urinal

- siphon and mounting set included, brushed finish
- rear assembling by M10 screws from the service room

SLPN 07	**91070**	Stainless steel urinal
SLPN 07C	**91073**	Stainless steel automatic urinal with integrated thermic flushing unit, 24V DC
SLPN 07CZ	**91075**	Stainless steel automatic urinal with integrated thermic flushing unit, 230V AC
SLPN 07CB	**91074**	Stainless steel automatic urinal with integrated thermic flushing unit, 6V

- siphon and mounting set included, brushed finish
- assembling through the service hatch with special screws (TORX)

SLPN 07E	**91071**	Stainless steel urinal with integrated infra-red flushing unit, 24V DC
SLPN 07EB	**91072**	Stainless steel urinal with integrated infra-red flushing unit, 6V

- siphon and mounting set included, brushed finish
- assembling through the service hatch with special screws (TORX)

SLPN 09	**91090**	Stainless steel urinal
SLPN 09C	**91093**	Stainless steel automatic urinal with integrated thermic flushing unit, 24V DC
SLPN 09CZ	**91095**	Stainless steel automatic urinal with integrated thermic flushing unit, 230V AC
SLPN 09CB	**91094**	Stainless steel automatic urinal with integrated thermic flushing unit, 6V

- siphon and mounting set included, brushed finish
- assembling through the service hatch with special screws (TORX)

SLPN 10E	**91109**	Stainless steel KEG urinal with integrated infra-red flushing unit, 24V DC
SLPN 10EB	**91105**	Stainless steel KEG urinal with integrated infra-red flushing unit, 6V

- siphon and mounting set included, brushed finish
- rear assembling by the mounting plate and special screws (TORX)

STAINLESS STEEL URINAL TROUGHS

SLPN 02	**91020**	Stainless steel wall-mounted urinal trough WITHOUT electronics, 600 mm
SLPN 02C	**91023**	Stainless steel automatic urinal through with integrated thermic flushing unit, 600 mm, 24V DC
SLPN 02CB	**91024**	Stainless steel automatic urinal through with integrated thermic flushing unit, 600 mm, 6V

- siphon and mounting set included, brushed finish
- different lengths could be made to order

SLPN 02E	**91021**	Stainless steel urinal trough with integrated infra-red flushing unit, 600 mm, 24V DC

- siphon and mounting set included, brushed finish
- different lengths could be made to order

SLPN 03	**91030**	Stainless steel wall-mounted urinal trough WITHOUT electronics, 1200 mm
SLPN 03C	**91033**	Stainless steel automatic urinal through with integrated thermic flushing unit, 1200 mm, 24V DC
SLPN 03CB	**91034**	Stainless steel automatic urinal through with integrated thermic flushing unit, 1200 mm, 6V

- siphon and mounting set included, brushed finish
- different lengths could be made to order

SLPN 03E	**91031**	Stainless steel urinal trough with 2 integrated infra-red flushing units, 1200 mm, 24V DC

- siphon and mounting set included, brushed finish
- different lengths could be made to order

SLPN 04	**91040**	Stainless steel wall-mounted urinal trough WITHOUT electronics, 1800 mm
SLPN 04C	**91043**	Stainless steel automatic urinal through with integrated thermic flushing unit, 1800 mm, 24V DC
SLPN 04CB	**91044**	Stainless steel automatic urinal through with integrated thermic flushing unit, 1800 mm, 6V

- siphon and mounting set included, brushed finish
- different lengths could be made to order

SLPN 04E	**91041**	Stainless steel urinal trough with 3 integrated infra-red flushing units, 1800 mm, 24V DC

- siphon and mounting set included, brushed finish
- different lengths could be made to order

SLPN 05	**91050**	Stainless steel wall-mounted urinal trough WITHOUT electronics, 2400 mm

- siphon and mounting set included, brushed finish
- different lengths could be made to order

SLPN 05E	**91051**	Stainless steel urinal trough with 4 integrated infra-red flushing units, 2400 mm, 24V DC

- siphon and mounting set included, brushed finish
- different lengths could be made to order

SLPN 02Z	**91026**	Stainless steel floor-standing urinal trough WITHOUT electronics, 600 mm
SLPN 03Z	**91036**	Stainless steel floor-standing urinal trough WITHOUT electronics, 1200 mm
SLPN 04Z	**91046**	Stainless steel floor-standing urinal trough WITHOUT electronics, 1800 mm
SLPN 05Z	**91056**	Stainless steel floor-standing urinal trough WITHOUT electronics, 2400 mm

- flushing pipe
- siphon and mounting set included, brushed finish
- different lengths could be made to order

SLP 01Z	**01011**	Time-controlled flushing unit for SLPN 02(Z) – 05(Z), 230V AC

STAINLESS STEEL DIVIDING CURTAIN

SLZN 13	**95130**	Stainless steel dividing curtain between urinals

STAINLESS STEEL TOILETS

SLWN 03 **94030** Stainless steel floor standing toilet

- without cover seat, siphon and mounting set included, brushed finish
- rear assembling by mounting plate
- cover seat hole plugs included

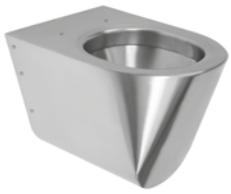

SLWN 04 **94040** Stainless steel hanging toilet

- wihout cover seat, siphon and mounting set included, brushed finish
- rear assembling by mounting plate
- cover seat hole plugs included

SLWN 05 **94050** Vandal-proof stainless steel floor standing toilet

- without cover seat, siphon and M10 screws included, brushed finish
- rear assembling by M10 screws from the service room

SLWN 09 **94090** Stainless steel hanging toilet

- without cover seat, siphon included, brushed finish
- rear assembling by special screws
- cover seat hole plugs included

SLWN 11 **94110** Stainless steel hanging toilet for disabled people

- without cover seat, siphon included, brushed finish
- rear assembling by mounting plate
- cover seat hole plugs included

SLWN 12 **94120** Vandal-proof stainless steel hanging toilet

- without cover seat, siphon included, brushed finish
- rear assembling by M10 screws from the service room

SLWN 13 **94130** Stainless steel floor standing toilet for disabled people

- without cover seat, siphon included, brushed finish
- rear assembling through the service hatch
- cover seat hole plugs included

SLWN 14 **94140** Vandal-proof stainless steel floor standing toilet

- without cover seat, siphon included, brushed finish
- rear assembling through the service hatch
- cover seat hole plugs included
- waste outlet into the floor or wall

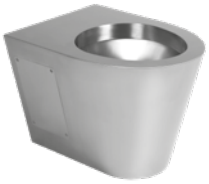

SLWN 19 **94190** Stainless steel hanging toilet

- without cover seat, siphon inlcuded, brushed finish
- assembling through the service hatch
- cover seat holes could be made to order

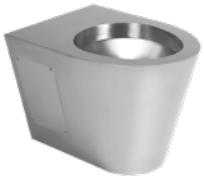

SLWN 30 **94302** Stainless steel floor standing toilet

- without cover seat, siphon inlcuded, brushed finish
- assembling through the service hatch
- waste outlet into the floor or wall

STAINLESS STEEL TOILETS WITH THE TANK

SLWN 15 **94150** Stainless steel toilet with a tank

- manual flushing 4/6 l
- without cover seat, siphon included, brushed finish
- assembling through the service hatch
- cover seat hole plugs included

SLWN 16 **94160** Stainless steel toilet for disabled people with a tank

- manual flushing 4/6 l
- without cover seat, siphon included, brushed finish
- assembling through the service hatch
- cover seat hole plugs included

SLZN 31C

SLZN 31D

SLZN 31C **95313** Plastic black toilet cover seat

SLZN 31D **95314** Plastic black toilet cover seat

- stainless steel pants
- hole dimensions 225 x 280 mm
- outer width 355 mm
- distance of front edge from screw axis 425 mm
- SLZN 31C is destined for SLWN 04, SLWN 09, SLWN 11, SLWN 13, SLWN 14, SLWN 19
- SLZN 31D is destined for SLWN 03, SLWN 15, SLWN 16

STAINLESS STEEL SQUATTING PAN

SLWN 07	**94070**	Stainless steel squatting pan

- two flushing heads and stainless steel siphon included, brushed finish

SLA 27	**06270**	Set for SLWN 07 for connecting to automatic flushing unit SLW 01xx

VANDAL-PROOF COMBINATION UNITS

SLWN 08P	**94082**	Vandal-proof corner combination unit, floor standing toilet on the right side
SLWN 08L	**94081**	Vandal-proof corner combination unit, floor standing toilet on the left side
SLWN 08ZP	**94084**	Vandal-proof corner combination unit, hanging toilet on the right side
SLWN 08ZL	**94083**	Vandal-proof corner combination unit, hanging toilet on the left side

- without cover seat, with push buttons, M10 screws included, brushed finish
- rear assembling by M10 screws from the service room

SLWN 08PP	**94085**	Vandal-proof piezo corner combination unit, floor standing toilet on the right side, 24V DC
SLWN 08LP	**94086**	Vandal-proof piezo corner combination unit, floor standing toilet on the left side, 24V DC
SLWN 08ZPP	**94087**	Vandal-proof piezo corner combination unit, hanging toilet on the right side, 24V DC
SLWN 08ZLP	**94088**	Vandal-proof piezo corner combination unit, hanging toilet on the left side, 24V DC

- without cover seat, with piezo button for WC and piezo button for washbasin spout
- siphon and mounting set included, brushed finish
- rear assembling by M10 screws from the service room

SLWN 18P	**94182**	Vandal-proof corner combination unit, floor standing toilet on the right side
SLWN 18L	**94181**	Vandal-proof corner combination unit, floor standing toilet on the left side
SLWN 18ZP	**94184**	Vandal-proof corner combination unit, hanging toilet on the right side
SLWN 18ZL	**94183**	Vandal-proof corner combination unit, hanging toilet on the left side

- without cover seat, with push buttons, brushed finish
- assembling through the service hatch

SLWN 18PP	**94185**	Vandal-proof piezo corner combination unit, floor standing toilet on the right side, 24V DC
SLWN 18LP	**94186**	Vandal-proof piezo corner combination unit, floor standing toilet on the left side, 24V DC
SLWN 18ZPP	**94187**	Vandal-proof piezo corner combination unit, hanging toilet on the right side, 24V DC
SLWN 18ZLP	**94188**	Vandal-proof piezo corner combination unit, hanging toilet on the left side, 24V DC

- without cover seat, with piezo push button for WC and piezo push button for washbasin spout
- siphon and mounting set included, brushed finish
- assembling through the service hatch

SLWN 28	**94282**	Vandal-proof combination unit, floor standing toilet
SLWN 28Z	**94284**	Vandal-proof combination unit, hanging toilet

- without cover seat, with push buttons, brushed finish
- rear assembling by M10 screws from the service room

SLWN 38	**94382**	Vandal-proof combination unit, floor standing toilet
SLWN 38Z	**94384**	Vandal-proof combination unit, hanging toilet

- without cover seat, with push buttons, brushed finish
- assembling through the service hatch

SLWN 38P	**94383**	Vandal-proof piezo combination unit, floor standing toilet, 24 V DC
SLWN 38ZP	**94385**	Vandal-proof piezo combination unit, hanging toilet, 24 V DC

- without cover seat, with piezo push button for WC and piezo push button for washbasin spout
- siphon and mounting set included, brushed finish
- assembling through the service hatch

SLA 25	**06250**	Set for connection of SLWN 08, 18,28, 38

STAINLESS STEEL AUTOMATIC INFRA-RED AND PIEZO SHOWER PANELS

SLSN 01E	**92011**	Stainless steel automatic shower panel for cold or premixed water, 24V DC
SLSN 01EB	**92013**	Stainless steel automatic shower panel for cold or premixed water, 6V

- could be made to order from stainless steel AISI - 316L

SLSN 02E	**92021**	Stainless steel automatic shower panel with a mixer, 24V DC
SLSN 02EB	**92023**	Stainless steel automatic shower panel with a mixer, 6V
SLSN 02ET	**92022**	Stainless steel automatic shower panel with a thermostatic mixer, 24V DC
SLSN 02ETB	**92024**	Stainless steel automatic shower panel with a thermostatic mixer, 6V

- could be made to order from stainless steel AISI - 316L

SLSN 01P	**92018**	Stainless steel piezo shower panel for cold or premixed water, 24V DC
SLSN 01PB	**92019**	Stainless steel piezo shower panel for cold or premixed water, 6V

- could be made to order from stainless steel AISI - 316L

SLSN 02P	**92028**	Stainless steel piezo shower panel with a mixer, 24V DC
SLSN 02PB	**92029**	Stainless steel piezo shower panel with a mixer, 6V
SLSN 02PT	**82021**	Stainless steel piezo shower panel with a thermostatic mixer, 24V DC
SLSN 02PTB	**82022**	Stainless steel piezo shower panel with a thermostatic mixer, 6V

- could be made to order from stainless steel AISI - 316L

SLSN 01PA	**92010**	Vandal-proof stainless steel piezo shower panel for cold or premixed water, 24V DC
SLSN 02PA	**92025**	Vandal-proof stainless steel piezo shower panel with a mixer, 24V DC

- assembling through the service hatch
- could be made to order from stainless steel AISI - 316L

STAINLESS STEEL SHOWER TRAYS

SLSN 06 **92060** Stainless steel shower tray 700 x 700 mm

- siphon and cover included, brushed finish

SLSN 07 **92070** Stainless steel shower tray 800 x 800 mm

- siphon and cover included, brushed finish

SLSN 08 **92080** Stainless steel shower tray 900 x 900 mm

- siphon and cover included, brushed finish

SLSN 10 **82100** Stainless steel shower tray 1000 x 1000 mm

- siphon and cover included, brushed finish

STAINLESS STEEL BATH TUBS

SLSN 09 **92090** Stainless steel bath tub, 1700 x 800 x 460 mm

- siphon, brushed finish
- different dimensions could be made to order

SLSN 11 **92110** Stainless steel baby bath tub, 700 x 400 mm

- siphon included, brushed finish

SECURITY EYEWASH AND BODY SHOWERS

SLSN 19 **92190** Wall-mounted eyewash shower with two spray heads

SLSN 20 **82200** Stainless steel eyewash shower with two spray heads, bowl and start lever

SLSN 21 **92210** Hand-held eyewash shower with one spray head with plastic wall holder

SLSN 21D **92211** Hand-held eyewash shower with one spray head, rake angle 45°, with a grommet into the desk

SLSN 21V **92215** Hand-held eyewash shower with one spray head with plastic wall holder (water inlet from the second side of the wall)

SLSN 22 **92220** Hand-held eyewash shower with two spray heads with plastic wall holder

SLSN 22D **92221** Hand-held eyewash shower with two spray heads, rake angle 45°, with a grommet into the desk

SLSN 22V **92225** Hand-held eyewash shower with two spray heads with plastic wall holder (water inlet from the second side of the wall)

	SLSN 23	**92230**	Free standing body and eyewash shower - body shower with start trigger and self-cleaning shower head, eyewash shower with two spray heads, bowl and start lever
	SLSN 23Z	**82235**	Wall-mounted body and eyewash shower - body shower with start trigger and self-cleaning shower head, eyewash shower with two spray heads, bowl and start lever
	SLSN 23H	**82236**	Free standing outdoor body shower with start trigger and heating, till max. -20°C
	SLSN 23HO	**82237**	Free standing outdoor body and eyewash shower with start trigger and heating, till max. -20°C
	SLSN 24	**92240**	Wall-mounted body shower with start trigger and self-cleaning shower head
	SLSN 25	**92250**	Free standing eyewash shower with two spray heads, bowl and start lever
	SLSN 26	**92260**	Portable eyewash and body shower with one spray head
	SLSN 27	**92270**	Free standing outdoor eyewash shower with heating, till max. -20°C

- used for the first aid in accidents caused by fire, chemicals and another substances

STAINLESS STEEL CLEANER´S SINKS

SLVN 01 **98010** Stainless steel cleaner´s sink

- back splash, siphon, grating, overflow set and mounting set included, brushed finish
- waste output Ø 50 mm

SLVN 02	**98020**	Composite stainless steel floor standing cleaner´s sink with a washbasin
SLVN 02E	**98021**	Composite stainless steel floor standing cleaner´s sink with a washbasin with SLU 10, 24V DC
SLVN 02EB	**98022**	Composite stainless steel floor standing cleaner´s sink with a washbasin with SLU 10B, 9V

- siphon and grating included, brushed finish
- waste output Ø 50 mm

SLVN 03 **98030** Stainless steel floor standing cleaner´s sink

- siphon and grating included, brushed finish
- waste output Ø 50 mm

SLVN 03A **98037** Vandal-proof stainless steel floor standing cleaner´s sink with sheating

- siphon and grating included, brushed finish
- waste output Ø 50 mm
- assembling through the service hatch

SLVN 04 **98040** Stainless steel cleaner´s sink

- back splash, siphon, grating, overflow and mounting set included, brushed finish
- waste output Ø 50 mm

SLVN 05 **98050** Stainless steel cleaner´s sink

- back splash, siphon, grating, overflow and mounting set included, brushed finish
- waste output Ø 50 mm

SLZN 69 **95690** Mop holder

- max. mop Ø 25 mm

STAINLESS STEEL SWIMMING POOL SLOTTED DRAINS

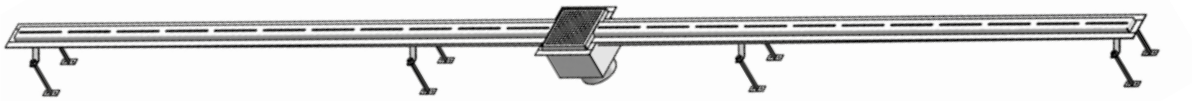

SLKN 01	**69010**	Stainless steel floor drain trough for swimming pools, length 2 m, AISI 304
SLKN 02	**69020**	Stainless steel floor drain trough for swimming pools, length 4 m, AISI 304
SLKN 01L	**69017**	Stainless steel floor drain trough for swimming pools, length 2 m, AISI 316L
SLKN 02L	**69027**	Stainless steel floor drain trough for swimming pools, length 4 m, AISI 316L

- stainless steel waste outlet with a stink trap included
- bottom bar not included
- different lengths could be made to order

STAINLESS STEEL BATHROOM FLOOR DRAINS

SLKN 03A - SLKN 03FX	Bathroom floor drain assembled in the open space, 750 mm
SLKN 04A - SLKN 04FX	Bathroom floor drain assembled in the open space, 950 mm
SLKN 05A - SLKN 05FX	Bathroom floor drain assembled in the open space, 1150 mm
SLKN 17A - SLKN 17FX	Bathroom floor drain assembled in the open space, 850 mm

SLKN 06A - SLKN 06FX	Bathroom floor drain assembled near by the wall, 750 mm
SLKN 07A - SLKN 07FX	Bathroom floor drain assembled near by the wall, 950 mm
SLKN 08A - SLKN 08FX	Bathroom floor drain assembled near by the wall, 1150 mm
SLKN 18A - SLKN 18FX	Bathroom floor drain assembled near by the wall, 850 mm

- siphon and grid included
- index X - brushed finish
- different lengths could be made to order

SLKN 09	**69090**	Bathroom floor drain for for tiles insert, open space, lenght 750 mm
SLKN 10	**69100**	Bathroom floor drain for for tiles insert, open space, lenght 950 mm
SLKN 11	**69110**	Bathroom floor drain for for tiles insert, open space, lenght 1150 mm
SLKN 12	**69120**	Bathroom floor drain for for tiles insert, open space, lenght 850 mm
SLKN 13	**69130**	Bathroom floor drain for for tiles insert, near by the wall, lenght 750 mm
SLKN 14	**69140**	Bathroom floor drain for for tiles insert, near by the wall, lenght 850 mm
SLKN 15	**69150**	Bathroom floor drain for for tiles insert, near by the wall, lenght 950 mm
SLKN 16	**69160**	Bathroom floor drain for for tiles insert, near by the wall, lenght 1150 mm

- siphon and grid included
- different lengths could be made to order

- plastic siphon Ø 40/50 mm and grid for tiles included
- removable smell trap
- the possibility of direct drainage of the waste piping

A

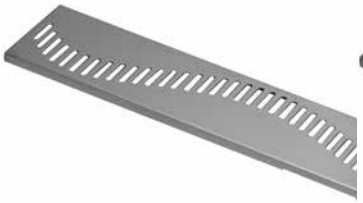

B

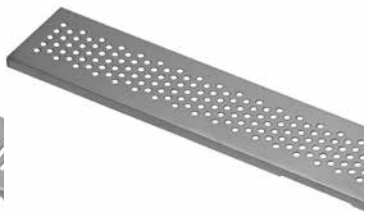

C

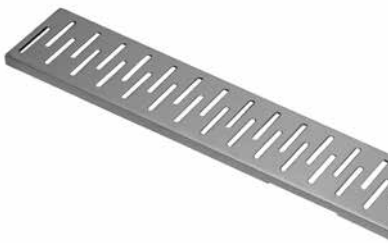

D

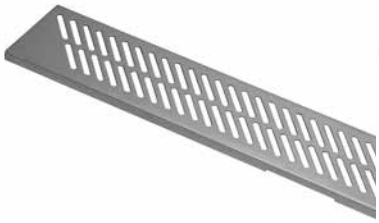

E

F

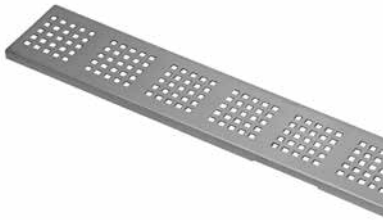

COIN AND TOKEN MACHINES

Set with coin shower timer is made on base of the specific request.

SLZA 01M	**88011**	Coin and token shower timer for one to three showers, 24V DC - direct control, choice of shower by the machine
SLZA 01N	**88013**	Coin and token shower timer for one to three showers, 24V DC - interactive control, choice of shower by the machine
SLZA 01LM	**88015**	Coin and token shower timer for one to three showers, 24V DC - direct control, choice of shower by the user
SLZA 01LN	**88017**	Coin and token shower timer for one to three showers, 24V DC - interactive control, choice of shower by the user

- material stainless steel AISI 304, could be made to order from stainless steel AISI 316L, brushed finish

SLZA 01MZ	**88012**	Recessed coin and token shower timer for one to three showers, 24V DC - direct control, choice of shower by the machine
SLZA 01NZ	**88014**	Recessed coin and token shower timer for one to three showers, 24V DC - interactive control, choice of shower by the machine
SLZA 01LMZ	**88016**	Recessed coin and token shower timer for one to three showers, 24V DC - direct control, choice of shower by the user
SLZA 01LNZ	**88018**	Recessed coin and token shower timer for one to three showers, 24V DC - interactive control, choice of shower by the user

- mounted into the wall
- material stainless steel AISI 304, could be made to order from stainless steel AISI 316L, brushed finish

SLZA 02M	**88021**	Coin and token shower timer for four to twelve showers, 24V DC - direct control, choice of shower by the machine
SLZA 02N	**88023**	Coin and token shower timer for four to twelve showers, 24V DC - interactive control, choice of shower by the machine
SLZA 02LM	**88027**	Coin and token shower timer for four to eight showers, 24V DC - direct control, choice of shower by the user
SLZA 02LN	**88029**	Coin and token shower timer for four to eight showers, 24V DC - interactive control, choice of shower by the user

- material stainless steel AISI 304, could be made to order from stainless steel AISI 316L, brushed finish

SLZA 02MZ	**88022**	Recessed coin and token shower timer for four to twelve showers, 24V DC - direct control, choice of shower by the machine
SLZA 02NZ	**88024**	Recessed coin and token shower timer for four to twelve showers, 24V DC - interactive control, choice of shower by the machine
SLZA 02LMZ	**88028**	Recessed coin and token shower timer for four to eight showers, 24V DC - direct control, choice of shower by the user
SLZA 02LNZ	**88020**	Recessed coin and token shower timer for four to eight showers, 24V DC - interactive control, choice of shower by the user

- mounted into the wall
- material stainless steel AISI 304, could be made to order from stainless steel AISI 316L

SLZA 03M	**88031**	Coin and token shower timer for one shower, 24V DC - direct control
SLZA 03N	**88033**	Coin and token shower timer for one shower, 24V DC - interactive control

- material stainless steel AISI 304, could be made to order from stainless steel AISI 316L

SLZA 03MZ	**88032**	Recessed coin and token shower timer for one shower, 24V DC - direct control
SLZA 03NZ	**88034**	Recessed coin and token shower timer for one shower, 24V DC - interactive control

- mounted into the wall
- material stainless steel AISI 304, could be made to order from stainless steel AISI 316L

SLZA 28 SLZA 29 SLZA 29T

SLZA 28	**89286**	Stainless steel token shower panel, for cold or premixed water, 24V DC
SLZA 29	**89290**	Stainless steel token shower panel, with mixer for cold and hot water, 24V DC
SLZA 29T	**89291**	Stainless steel token shower panel, with thermostatic mixer for cold and hot water, 24V DC

- material stainless steel AISI 304, could be made to order from stainless steel AISI 316L

SLZA 40	**88400**	Coin and token machine for door opening, 24V DC
SLZA 41	**88410**	Coin and token machine for single-phase appliances 230V AC, 24V DC

- material stainless steel AISI 304, could be made to order from stainless steel AISI 316L, brushed finish

SLZA 40Z	**88401**	Recessed coin and token machine for door opening, 24V DC
SLZA 41Z	**88411**	Recessed coin and token machine for single-phase appliances 230V AC, 24V DC

- mounted into the wall
- material stainless steel AISI 304, could be made to order from stainless steel AISI 316L, brushed finish

SHOWER CONTROLS WITH PIEZO BUTTON FOR COIN AND TOKEN MACHINES WITH INTERACTIVE CONTROL

SLZA 20P	**88207**	Shower control with piezo button – for premixed water
SLZA 20PK	**89204**	Shower control with piezo button with flowmeter - for premixed water

SLZA 20PH	**88208**	Shower control with piezo button - for cold and hot water, water temperature regulation by mixer
SLZA 20PKH	**89205**	Shower control with piezo button with flowmeter - for cold and hot water, water temperature regulation by mixer

SLZA 20PT	**88209**	Shower control with piezo button - for cold and hot water, water temperature regulation by thermostatic mixer
SLZA 20PKT	**89206**	Shower control with piezo button with flowmeter - for cold and hot water, water temperature regulation by thermostatic mixer

SLZA 21P	**88217**	Stainless steel wall mounted shower panel with piezo button - for premixed water
SLZA 21PK	**89214**	Stainless steel wall mounted shower panel with piezo button with flowmeter - for premixed water

SLZA 21PH	**88218**	Stainless steel wall mounted shower panel with piezo button - for cold and hot water, water temperature regulation by mixer
SLZA 21PKH	**89215**	Stainless steel wall mounted shower panel with piezo button with flowmeter - for cold and hot water, water temperature regulation by mixer

SLZA 21PT	**88219**	Stainless steel wall mounted shower panel with piezo button - for cold and hot water, water temperature regulation by thermostatic mixer
SLZA 21PKT	**89216**	Stainless steel wall mounted shower panel with piezo button with flowmeter - for cold and hot water, water temperature regulation by thermostatic mixer

AUTOMATIC SHOWER CONTROLS FOR COIN AND TOKEN MACHINES WITH DIRECT CONTROL

SLZA 20	**88200**	Shower control without piezo button – for premixed water
SLZA 20K	**89201**	Shower control without piezo button with flowmeter - for premixed water

SLZA 20H	**88205**	Shower control without piezo button – for cold and hot water, water temperature regulation by mixer
SLZA 20KH	**89202**	Shower control without piezo button with flowmeter - for cold and hot water, water temperature regulation by mixer

SLZA 20T	**88206**	Shower control without piezo button – for cold and hot water, water temperature regulation by thermostatic mixer
SLZA 20KT	**89203**	Shower control without piezo button with flowmeter - for cold and hot water, water temperature regulation by thermostatic mixer

SLZA 21	**88210**	Stainless steel wall mounted shower panel without piezo button - for premixed water
SLZA 21K	**89211**	Stainless steel wall mounted shower panel without piezo button with flowmeter - for premixed water

SLZA 21H	**88215**	Stainless steel wall mounted shower panel without piezo button - for cold and hot water, water temperature regulation by mixer
SLZA 21KH	**89212**	Stainless steel wall mounted shower panel without piezo button with flowmeter - for cold and hot water, water temperature regulation by mixer

SLZA 21T	**88216**	Stainless steel wall mounted shower panel without piezo button - for cold and hot water, water temperature regulation by thermostatic mixer
SLZA 21KT	**89213**	Stainless steel wall mounted shower panel without piezo button with flowmeter - for cold and hot water, water temperature regulation by thermostatic mixer

ACCESSORIES FOR COIN AND TOKEN MACHINES

SLD 05	**07050**	Universal remote control for an adjustment of parameters of shower timers

SLZA 15	**88150**	Valves distributor on DIN rail
SLZA 16	**88160**	Flowmeters distributor on DIN rail
SLZA 17	**88170**	Push buttons distributor on DIN rail

SLZA 50	**88500**	Set of 50 pcs tokens for shower timers SLZA 01xx, SLZA 02xx and SLZA 03xx

SLZA 52	**88520**	Set of 50 pcs tokens for shower panels SLZA 28, 29, 29T

STAINLESS STEEL RFID TOKEN MACHINES

- **comprehensive range of shower controls with a programmable RFID token**
- **wide range of re-programming of token**
- **stand alone programming station without having to connect to a PC**

Detail of slot for RFID token

SLZA 31	**89310**	Stainless steel RFID token shower panel, for cold or premixed water, 24V DC

- material stainless steel AISI 304, could be made to order from stainless steel AISI 316L

Detail of slot for RFID token

SLZA 32	**89321**	Stainless steel RFID token shower panel, with mixer for cold and hot water, 24V DC

- material stainless steel AISI 304, could be made to order from stainless steel AISI 316L

Detail of slot for RFID token

SLZA 32T **89320** Stainless steel RFID token shower panel, with thermostatic mixer for cold and hot water, 24V DC

- material stainless steel AISI 304, could be made to order from stainless steel AISI 316L

SLZA 35 **89350** RFID token shower control for cold or premixed water, 24V DC

ACCESSORIES FOR RFID TOKEN MACHINES

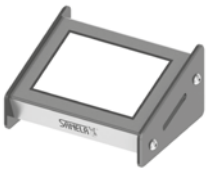

SLZA 30 **89300** Stand alone programming station for RFID tokens, 24V DC

- charging adapter included
- PC connection is not necessary
- touch display, Czech menu

SLZA 30C **89301** Credit reader for RFID tokens, 24V DC

- possibility of automatic set on units to token, wall hung credit reader

SLZA 30CZ **89302** Recessed credit reader for RFID tokens, 24V DC

- mounted into the wall
- possibility of automatic set on units to token, recessed credit reader

SLZA 51 **88510** Set of 50 pcs RFID tokens for token machines SLZA 31, 32, 32T, 35

SANELA

STAINLESS STEEL TOILET PAPER HOLDERS AND SUPPLY BIN FOR SANITARY BAGS

SLZN 01 **95010** Stainless steel holder for big coils of toilet paper, polished

- max. size of coil Ø 290 x 100 mm

SLZN 09 **95090** Stainless steel toilet paper holder, polished

SLZN 26 **95260** Stainless steel toilet paper holder, brushed

- for two coils of toilet paper (max. Ø 135 mm)

SLZN 26Z **95261** Stainless steel recessed of toilet paper holder, brushed

- mounted into the wall
- for two coils of toilet paper (max. Ø 135 mm)

SLZN 37 **95370** Stainless steel holder for big coils toilet paper, brushed

- max. size of coil Ø 290 x 100 mm

SLZN 37X **95371** Stainless steel holder for big coils toilet paper, brushed

- max. size of coil Ø 290 x 100 mm

SLZN 47 **95470** Stainless steel toilet paper holder, vertical, for one coil, brushed

SLZN 47D **85478** Stainless steel toilet paper holder, vertical, for two coils, brushed

SLZN 47H **85474** Stainless steel toilet paper holder, brushed

SLZN 53 **95530** Stainless steel supply bin for sanitary bags, brushed

- dimensions 95 x 27 x 136 mm

STAINLESS STEEL SUPPLY BINS FOR PAPER TOWELS AND WASTE BINS

SLZN 03 **95030** Stainless steel supply bin for a folder paper towels, polished

- dimensions 340 x 110 x 265 mm
- max. size of filling 260 x 100 mm

SLZN 10	**95100**	Stainless steel waste bin with a plastic insert, volume 3 l, Ø 170 x 245 mm, polished
SLZN 10X	**75106**	Stainless steel waste bin with a plastic insert, volume 3 l, Ø 170 x 245 mm, brushed
SLZN 11	**95110**	Stainless steel waste bin with a plastic insert, volume 5 l, Ø 205 x 270 mm, polished
SLZN 11X	**95111**	Stainless steel waste bin with a plastic insert, volume 5 l, Ø 205 x 270 mm, brushed
SLZN 12	**95120**	Stainless steel waste bin with a plastic insert, volume 20 l, Ø 295 x 440 mm, polished
SLZN 12X	**95121**	Stainless steel waste bin with a plastic insert, volume 20 l, Ø 295 x 440 mm, brushed
SLZN 15	**95150**	Stainless steel waste bin with a plastic insert, volume 12 l, Ø 250 x 380 mm, polished
SLZN 15X	**75156**	Stainless steel waste bin with a plastic insert, volume 12 l, Ø 250 x 380 mm, brushed

SLZN 20 **95200** Stainless steel supply bin for folder paper towels, brushed

- dimensions 340 x 110 x 265 mm
- max. size of filling 260 x 100 mm
- capacity cca 600/800 paper towels

SLZN 20X **95201** Stainless steel supply bin for folder paper towels, brushed

- dimensions 340 x 110 x 265 mm
- max. size of filling 260 x 100 mm
- capacity cca 600/800 paper towels

SLZN 21 **95210** Stainless steel supply bin for folder paper towels with a waste bin, brushed

- dimensions 710 x 325 x 165 mm
- max size of filling 260x100 mm
- capacity cca 600/800 paper towels
- removable stainless steel waste bin, volume 7,5 l

SLZN 21Z **95211** Stainless steel recessed supply bin for folder paper towels with a waste bin, brushed

- mounted into the wall
- dimensions 790 x 330 x 125 mm (on the wall)
- 600/800 paper towels, waste bin volume 7,5 l

SLZN 22 **95220** Stainless steel wall hung waste bin, volume 12 l, brushed

- dimensions 300 x 160 x 350 mm

SLZN 23 **95230** Stainless steel wall hung waste bin, volume 26,5 l, polished

SLZN 23X **75236** Stainless steel wall hung waste bin, volume 26,5 l, brushed

- dimensions 360 x 160 x 435 mm

SLZN 24 **95240** Stainless steel wall hung waste bin with a cover, volume 4,5 l, brushed

- dimensions 192 x 97 x 253 mm

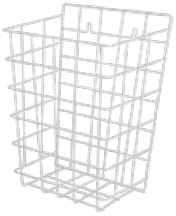

SLZN 40 **95400** Steel wire wall hung waste bin, white, volume 15 l

- dimensions 385 x 290 x 130 mm

SLZN 42 **95420** Steel wire floor standing waste bin, white, volume 47 l

- dimensions 540 x 340 x 260 mm

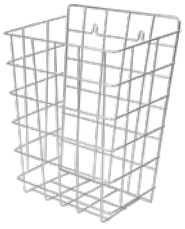

SLZN 41 **95410** Stainless steel wire wall hung waste bin, volume 15 l

- dimensions 385 x 290 x 130 mm

SLZN 43 **95430** Stainless steel wire floor standing waste bin, volume 47 l

- dimensions 540 x 340 x 260 mm

SLZN 49AA	**85490**	Stainless steel floor standing waste bin, volume 67 l, legend PLASTIC ONLY, brushed
SLZN 49AB	**85491**	Stainless steel floor standing waste bin, volume 67 l, legend PAPER ONLY, brushed
SLZN 49AC	**85492**	Stainless steel floor standing waste bin, volume 67 l, legend GLASS ONLY, brushed
SLZN 49AD	**85493**	Stainless steel floor standing waste bin, volume 67 l, legend GENERAL WASTE, brushed

- dimensions 420 x 320 x 590 mm
- different legend or dimensions could be made to order

SLZN 56Z **95561** Stainless steel recessed supply bin for a folder paper towels, brushed

- mounted into the wall
- dimensions 435 x 328 x 122 mm

SLZN 63Z **95631** Stainless steel recessed waste bin, volume 11 l, brushed

- mounted into the wall
- dimensions 360 x 710 x 110 mm

SLZN 77 **85770** Stainless steel floor standing outdoor waste bin with ashtray, volume 15 l, polished

- dimensions 200 x 700 mm

SLZN 78X	**85780**	Stainless steel squared waste bin with a plastic insert, volume 6 l, dimensions 285 x 205 x 245 mm, brushed
SLZN 79X	**85790**	Stainless steel squared waste bin with a plastic insert, volume 12 l, dimensions 395 x 235 x 285 mm, brushed
SLZN 80X	**85800**	Stainless steel squared waste bin with a plastic insert, volume 20 l, dimensions 450 x 280 x 310 mm, brushed

STAINLESS STEEL SOAP AND DISINFECTION DISPENSERS

SLZN 05	**95050**	Stainless steel liquid soap dispenser, volume 1,25 l, polished, dimensions 120 x 70 x 210 mm
SLZN 06	**95060**	Stainless steel liquid soap dispenser, volume 0,85 l, polished, dimensions 110 x 60 x 180 mm
SLZN 07	**95070**	Stainless steel liquid soap dispenser, volume 0,5 l, polished, dimensions 95 x 55 x 145 mm

SLZN 17 **95170** Recessed liquid soap dispenser, polished

- max. thickness of desk 90 mm
- needful Ø desk hole 22 mm
- volume 0,6 l

SLZN 39 **95390** Stainless steel liquid soap dispenser, volume 1,2 l, brushed

- dimensions 125 x 100 x 210 mm

SLZN 62Z **95621** Recessed soap dispenser to the wall,volume 1 l, brushed

- dimensions 260 x 150 x 100 mm

SLZN 71E **85717** Automatic wall-mounted liquid soap and disinfection dispenser, inner plastic container, volume 0,85 l, brushed, 4,5 V

- dimensions 108 x 268 x 107 mm

SLZN 72E **85727** Automatic wall-mounted foam soap dispenser, volume 0,85 l, brushed

- dimensions 108 x 268 x 107 mm

SLZN 73 **85730** Wall-mounted liquid soap and disinfection dispenser, inner plastic container, volume 1 l, brushed

- dimensions 250 x 100 x 120 mm

SLZN 74	**85740**	Stainless steel liquid soap and disinfection dispenser - elbow operation, volume 0,5l, brushed

- dimensions 245 x 82 x 160 mm

SLZN 83E	**85831**	Automatic stainless steel wall-mounted soap dispenser, 1 l soap canister, 230V AC

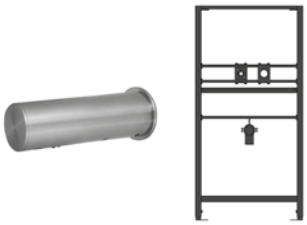

SLZN 83ER	**85838**	Automatic stainless steel wall-mounted soap dispenser, 1 l soap canister, mounting frame SLR 24 included, 230V AC

SLZN 83E2	**85832**	Set of 2 pcs. automatic stainless steel wall-mounted soap dispensers, 6 l central soap canister, 230V AC
SLZN 83E3	**85833**	Set of 3 pcs. automatic stainless steel wall-mounted soap dispensers, 6 l central soap canister, 230V AC
SLZN 83E4	**85834**	Set of 4 pcs. automatic stainless steel wall-mounted soap dispensers, 6 l central soap canister, 230V AC
SLZN 83E5	**85835**	Set of 5 pcs. automatic stainless steel wall-mounted soap dispensers, 6 l central soap canister, 230V AC
SLZN 83E6	**85836**	Set of 6 pcs. automatic stainless steel wall-mounted soap dispensers, 6 l central soap canister, 230V AC

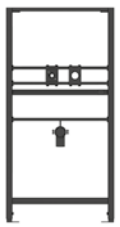

SLZN 83ER2	**85812**	Set of 2 pcs. automatic stainless steel wall-mounted soap dispensers, 6 l central soap canister, mounting frame SLR 24 included, 230V AC
SLZN 83ER3	**85813**	Set of 3 pcs. automatic stainless steel wall-mounted soap dispensers, 6 l central soap canister, mounting frame SLR 24 included, 230V AC
SLZN 83ER4	**85814**	Set of 4 pcs. automatic stainless steel wall-mounted soap dispensers, 6 l central soap canister, mounting frame SLR 24 included, 230V AC
SLZN 83ER5	**85815**	Set of 5 pcs. automatic stainless steel wall-mounted soap dispensers, 6 l central soap canister, mounting frame SLR 24 included, 230V AC
SLZN 83ER6	**85816**	Set of 6 pcs. automatic stainless steel wall-mounted soap dispensers, 6 l central soap canister, mounting frame SLR 24 included, 230V AC

SLZN 91E	**85911**	Automatic stainless steel countertop soap dispenser, 1 l soap canister, 230V AC

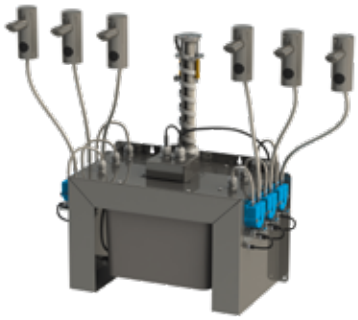

SLZN 91E2	**85912**	Set of 2 pcs. automatic stainless steel countertop soap dispensers, 6 l central soap canister, 230V AC
SLZN 91E3	**85913**	Set of 3 pcs. automatic stainless steel countertop soap dispensers, 6 l central soap canister, 230V AC
SLZN 91E4	**85914**	Set of 4 pcs. automatic stainless steel countertop soap dispensers, 6 l central soap canister, 230V AC
SLZN 91E5	**85915**	Set of 5 pcs. automatic stainless steel countertop soap dispensers, 6 l central soap canister, 230V AC
SLZN 91E6	**85916**	Set of 6 pcs. automatic stainless steel countertop soap dispensers, 6 l central soap canister, 230V AC

PLASTIC ACCESSORIES FOR HEALTH CARE

SLDN 01 **72010** Holder for big coils of toilet paper, white plastic ABS

- max. size of coil Ø 260 mm

SLDN 02 **72020** Holder for coils of paper towels, white plastic ABS

- dimensions 260 x 230 x 300 mm
- max. size of coil Ø 210 mm

SLDN 03 **72030** Supply bin for folder paper towels, white plastic ABS

- dimensions 260 x 140 x 300 mm (650 pcs. of paper towels)
- max. size of filling 230 x 250 mm

SLDN 05	**72050**	Foam soap dispenser, volume 1 l, white plastic ABS
SLDN 06	**72060**	Soap and gel disinfection dispenser, volume 1 l, white plastic ABS
SLDN 07	**72070**	Disinfection dispenser with spray spatter, volume 1 l, white plastic ABS

- dimensions 245 x 110 x 115 mm

SLDN 08E **72081** Automatic liquid soap and disinfection dispenser, volume 1 l, white plastic ABS, 6V

- dimensions 280 x 145 x 140 mm

SLDN 01N **72011** Holder for big coils of toilet paper, black plastic ABS

- max. size of coil Ø 260 mm

SLDN 02N **72021** Supply bin for big coils of paper towels, black plastic ABS

- dimensions 260 x 230 x 300 mm
- max. size of coil Ø 210 mm

SLDN 03N **72031** Supply bin for folder paper towels, black plastic ABS

- dimensions 260 x 140 x 300 mm (650 pcs. of paper towels)
- max. size of filling 230 x 250 mm

SLDN 05N	**72051**	Foam soap dispenser, volume 1 l, black plastic ABS
SLDN 06N	**72061**	Soap and gel disinfection dispenser, volume 1 l, black plastic ABS
SLDN 07N	**72071**	Disinfection dispenser with spray spatter, volume 1 l, black plastic ABS

STAINLESS STEEL HOOKS AND TOILET BRUSHES

SLZN 45	**95450**	Vandal-proof stainless steel hook, brushed

SLZN 46	**95460**	Stainless steel hook, Ø 20 x 50 mm, brushed

SLZN 46D	**85468**	Stainless steel hook, Ø 20 x 100 mm, brushed

SLZN 57	**95570**	Stainless steel double hook, polished
SLZN 57X	**75576**	Stainless steel double hook, brushed

SLZN 67	**95670**	Stainless steel hook, polished

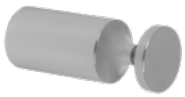

SLZN 68	**95680**	Stainless steel hook, polished

SLZN 70	**95700**	Vandal-proof stainless steel hook with “Anti-suicidal“ system, brushed

SLZN 19	**95190**	Stainless steel wall mounted toilet brush, polished
SLZN 19X	**75196**	Stainless steel wall mounted toilet brush, brushed

- stainless steel cover dimensions Ø 120 x 260 mm
- mounted on the wall or on the floor

AUTOMATIC WALL MOUNTED HAND DRYERS

SLO 01L	**79011**	Automatic wall mounted hand dryer, white cover, 230V AC

SLO 01S	**79012**	Automatic wall mounted hand dryer, grey cover, 230V AC

SLO 02E	**79024**	Automatic wall mounted hand dryer with stainless steel brushed cover, 230V AC

- revolving chromed air outlet included

SLO 02M	**79023**	Mechanical wall mounted hand dryer with stainless steel brushed cover and push button, 230V AC

- revolving chromed air outlet included

STAINLESS STEEL MIRRORS

SLZN 27	**95270**	Stainless steel mirror (500 x 400 x 7 mm)
SLZN 30	**95300**	Stainless steel mirror (600 x 400 x 7 mm)

- different dimensions could be made to order

SLZN 52	**95520**	Stainless steel folding mirror for disabled people, wall controlled, (400 x 600 x 7 mm), high polished finish

SLZN 55	**95550**	Stainless steel mirror 900 x 400 x 7 mm

STAINLESS STEEL PICTOGRAMS, SEPARATORS, SHELVES

SLZN 44AA	**75445**	Pictogram - toilet men
SLZN 44AB	**75444**	Pictogram - toilet women
SLZN 44AC	**75443**	Pictogram - toilet for disabled
SLZN 44AD	**75442**	Pictogram - toilet men and women
SLZN 44B	**75441**	Pictogram - information
SLZN 44C	**85449**	Pictogram - telephone
SLZN 44D	**85448**	Pictogram - snack
SLZN 44E	**85447**	Pictogram - first aid
SLZN 44F	**85446**	Pictogram - no smoking
SLZN 44G	**85445**	Pictogram - cloakroom
SLZN 44H	**85444**	Pictogram - cleaning room
SLZN 44J	**85443**	Pictogram - lift
SLZN 44K	**85442**	Pictogram - waiting room
SLZN 44L	**85441**	Pictogram - postbox
SLZN 44M	**95449**	Pictogram - stairs
SLZN 44N	**95448**	Pictogram - no open fire
SLZN 44P	**95447**	Pictogram - electrical device
SLZN 44R	**95446**	Pictogram - shower
SLZN 44S	**95445**	Pictogram - baby changing room
SLZN 44T	**95444**	Pictogram - toilet
SLZN 44U	**95443**	Pictogram - fork and knife
SLZN 44V	**95442**	Pictogram - sauna

- dimensions 120 x 120 mm, brushed finish
- different types of pictograms could be made to order
- 3M self-sealing tape included

SLZN 64 **95640** Plaster separator

SLZN 64N **95648** Sand separator

SLZN 65 **95650** Stainless steel shelf, dimensions 800 x 100 x 60 mm, brushed

- different lengths could be made to order

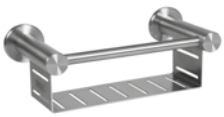

SLZN 76 **85760** Stainless steel shampoo holder, brushed

- different lengths could be made to order

TOILET COVER SEATS, SIPHON

SLZN 31C **95313** Black plastic toilet cover seat

- stainless steel hinges
- inner dimensions 225 x 280 mm
- width 355 mm
- dimension from screws to the frontal edge 425 mm
- destined for SLWN 04, SLWN 09, SLWN 11, SLWN 13, SLWN 14, SLWN 19

SLZN 31D **95314** Black plastic toilet cover seat

- stainless steel hinges
- inner dimensions 225 x 280 mm
- width 355 mm
- dimension from screws to the frontal edge 425 mm
- destined for SLWN 03, SLWN 15, SLWN 16

SLZN 35 **95350** Design stainless steel siphon, brushed

- sleeve nut G 5/4" included
- without waste valve
- outlet Ø 32 mm

STAINLESS STEEL HAND RAILS

SLZM 02	**49020**	Stainless steel hand rail universal, length 300 mm, polished
SLZM 02X	**49024**	Stainless steel hand rail universal, length 300 mm, brushed

SLZM 02D	**49021**	Stainless steel hand rail universal, length 600 mm, polished
SLZM 02DX	**49025**	Stainless steel hand rail universal, length 600 mm, brushed

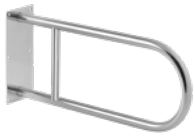

SLZM 03	**49030**	Stainless steel hand rail, solid, length 550 mm, polished
SLZM 03X	**49034**	Stainless steel hand rail, solid, length 550 mm, brushed
SLZM 03D	**49031**	Stainless steel hand rail, solid, length 900 mm, polished
SLZM 03DX	**49035**	Stainless steel hand rail, solid, length 900 mm, brushed

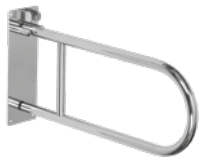

SLZM 03S	**49032**	Stainless steel hand rail, folding, length 550 mm, polished
SLZM 03SX	**49036**	Stainless steel hand rail, folding, length 550 mm, brushed
SLZM 03SD	**49033**	Stainless steel hand rail, folding, length 830 mm, polished
SLZM 03SDX	**49037**	Stainless steel hand rail, folding, length 830 mm, brushed

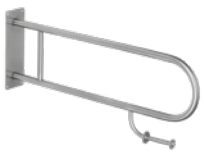

SLZM 03DP	**49038**	Stainless steel hand rail, solid, with toilet paper holder, length 900 mm, polished
SLZM 03DXP	**49039**	Stainless steel hand rail, solid, with toilet paper holder, length 900 mm, brushed
SLZM 03SDP	**39031**	Stainless steel hand rail, folding, with toilet paper holder, length 830 mm, polished
SLZM 03SDXP	**39032**	Stainless steel hand rail, folding, with toilet paper holder, length 830 mm, brushed

SLZM 04	**49040**	Stainless steel bath hand rail, solid, dimensions 305/420 mm, polished
SLZM 04X	**49044**	Stainless steel bath hand rail, solid, dimensions 305/420 mm, brushed

SLZM 05	**49050**	Stainless steel universal hand rail, solid, 1200 mm, polished
SLZM 05X	**49054**	Stainless steel universal hand rail, solid, 1200 mm, brushed

SLZM 06 **49060** Stainless steel folding chair to the shower, 450 x 450 mm, max. load 130 kg, brushed

DIAPER CHANGER

SLZN 54 **95540** Plastic baby changer, grey colour

- max. load 22,7 kg
- safety belts, supply bin for hygienic pads and plastic bags for used diapers
- special ABS plastic, whose prevents smell and bacteria spread

POWER SUPPLY UNITS

SLZ 01Y **05012** External power supply 230V AC /24V DC

SLZ 01Z **05011** External power supply 230V AC /24V DC

SLZ 04Y	**05042**	External power supply 85-240V AC / 24V DC for mounting on DIN rail in switchboard
SLZ 04Z	**05041**	External power supply 85-240V AC / 24V DC for mounting on DIN rail in switchboard
SLZ 04X	**10049**	External power supply 85-240V AC / 24V DC for mounting on DIN rail in switchboard

SLZ 05 **05050** Power supply for battery operated products (alternative to 9V / 6V battery)

SLZ 06 **05060** External power supply for 1 washbasin tap with one valve 230V AC / 24V DC

SLZ 07 **05070** Wall socket external power supply 230V AC / 24V DC

SLZ 08 **05080** Wall socket external power supply 230V AC / 12V for battery operated products

SHOWER HEADS

SLA 03 **06030** Vandal-proof shower head

- water inlet 1/2"
- rate of flow 9 l/min (0,05 - 0,9 MPa)

SLA 13 **06130** Vandal-proof shower head, adjustable angle of water flow

- water inlet 1/2"
- rate of flow 12 l/min (0,1 MPa)
- "Anti-suicidal" system

SLA 14 **06140** Vandal-proof shower head

- water inlet 1/2"
- rate of flow 12 l/min (0,1 MPa)
- "Anti-suicidal" system

SLA 28 **06280** Shower head

- water inlet 1/2"
- without flow restriction

SLA 39 **06390** Vandal-proof shower head

- water inlet 1/2"
- rate of flow 9 l/min. (0,05 – 0, 9 MPa)

SLA 40 **06400** Vandal-proof shower head

- water inlet 1/2"
- rate of flow 9 l/min. (0,05 – 0,9 MPa)

SELF CLOSING TAPS FOR WASHBASINS

SLT 100U **09000** Time set non-concussive basin tap

SLT 101U **09001** Vandal-proof time set non-concussive basin tap with aerator

SLT 109U **09009** Vandal-proof time set non-concussive coaxial basin mixer and antivandal aerator

SLT 113U **09014** Vandal-proof time set non-concussive basin tap

SLT 131S **09022** Vandal-proof time set non-concussive built in shower tap

SLT 138S **09128** Vandal-proof time set non-concussive built in shower tap with extension

SLT 150P **09029** Time set non-concussive urinal flush

SLT 153P **09140** Vandal-proof built-in time set non-concussive urinal flush

	SLT 161W	**09034**	Vandal-proof built-in time set non-concussive WC flush
	SLT 164W	**09136**	Vandal-proof built-in time set non-concussive WC flush with extension

MOUNTING FRAMES

	SLR 01	**08010**	Mounting frame to the plasterboard for a mountage of urinal with a built-in radar flushing unit
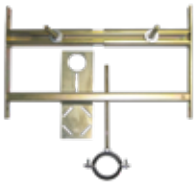	**SLR 01L**	**08015**	Mounting frame to the plasterboard for a urinal with a radar flushing unit on the mounting rail
	SLR 02	**08020**	Mounting frame to the plasterboard for urinals with a infra-red flushing unit above the urinal
	SLR 02D	**08024**	Mounting frame to the plasterboard for a montage of urinal DOMINO
	SLR 02N	**08021**	Mounting frame to the plasterboard for SLPN 07
	SLR 03	**08030**	Mounting frame for hanging toilet

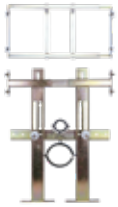	**SLR 03N**	**08031**	Mounting frame to the plasterboard for a hanging toilet
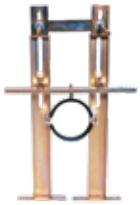	**SLR 03Z**	**08033**	Mounting frame to the wall for a hanging toilet
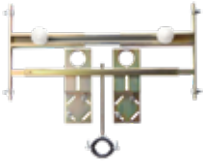	**SLR 04**	**08040**	Mounting frame to the plasterboard for a hanging washbasin
	SLR 06	**08060**	Mounting legs for the mounting frames to the plasterboard
	SLR 21	**08210**	Mounting frame with concealed tank for wall hung toilets, for installation to the plasterboard and brick wall
	SLR 22	**08220**	Mounting frame to the plasterboard for urinal and flushing unit installed above the urinal
	SLR 23	**08230**	Mounting frame to the plasterboard for washbasin
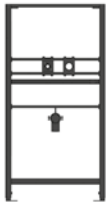	**SLR 24**	**08240**	Mouting frame for automatic wall-mounted washbasin tap and automatic soap dispenser

ACCESSORIES

SLA 02	**06020**	Urinal inlet fitting

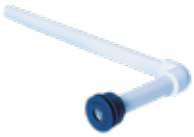

SLA 04	**06040**	Plastic connection with the sealling

SLA 09	**06090**	Lithium battery 9V/1200 mAh, type U9VL

SLA 10	**06100**	Stainless steel sieve for urinal NOVA PRO FELIX

SLA 11	**06110**	Plastic urinal screen, orange colour - mango scent
SLA 11A	**06111**	Plastic urinal screen, red colour - kiwi and grapefruit scent
SLA 11B	**06112**	Plastic urinal screen, transparent colour - honeysuckle scent
SLA 11C	**06113**	Plastic urinal screen, blue colour - cotton bloom scent

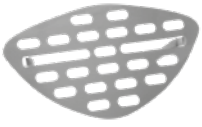

SLA 20	**06200**	Stainless steel sieve for urinal Livo

SLA 25	**06250**	Set for connection of SLWN 08, 18, 28, 38

	SLA 26	**06260**	Stainless steel sieve for urinal Golem
	SLA 27	**06270**	Set for SLWN 07 for connecting to automatic flushing unit SLW 01xx
	SLA 29	**06290**	Alkaline battery, 9V / 550 mAh, typ 6F22
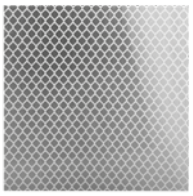	**SLA 30**	**06300**	Reflexive foil for SLP 05N/NZ
	SLA 32	**06320**	Universal stainless steel tap body extension 30 mm for SLU 91Nx, 92Nx, 93Nx
	SLA 33	**06330**	Universal stainless steel tap body extension 150 mm for SLU 91Nx, 92Nx, 93Nx
	SLA 36	**06360**	Set of 4 pcs. of alkaline batteries AA, 1,5V, 2700 mAh
	SLA 37	**06370**	Cleaner for stainless steel products

SANELA

SLA 52A	**06520**	Set of parts for mounting into the wall for SLU 39, 39x
SLA 52B	**06521**	Set of parts for mounting into the wall for SLU 39Px

SLD 03	**07030**	Universal remote control for setting of infra-red sensors

SLD 04	**07040**	Universal remote control for setting of radar flushing units and piezo controls

SLD 05	**07050**	Universal remote control for an adjustment of parameters of coin or token shower timers

SLD 07	**07070**	Universal remote control for adjustment of SLUN 70

SLR 54	**08540**	Angle valve, 1/2 x 3/8“

SLT 04	**09040**	Thermostatic mixing valve 3/4“ (28l/min)

SLT 05	**09050**	Thermostatic mixing valve 1/2” (42l/min)

SLT 07	**09070**	Thermostatic mixing valve 3/4“ (43l/min.)
SLT 08	**09080**	Thermostatic mixing valve 1“ (53l/min.)
SLT 09	**09090**	Thermostatic mixing valve 5/4“ (82l/min.)
SLT 10	**09100**	Thermostatic mixing valve 6/4“ (155l/min)

The producer reserves the right to change the prices. Any changes and printing errors are reserved.

SANELA

RADAR FLUSHING UNIT *WITH URINAL*

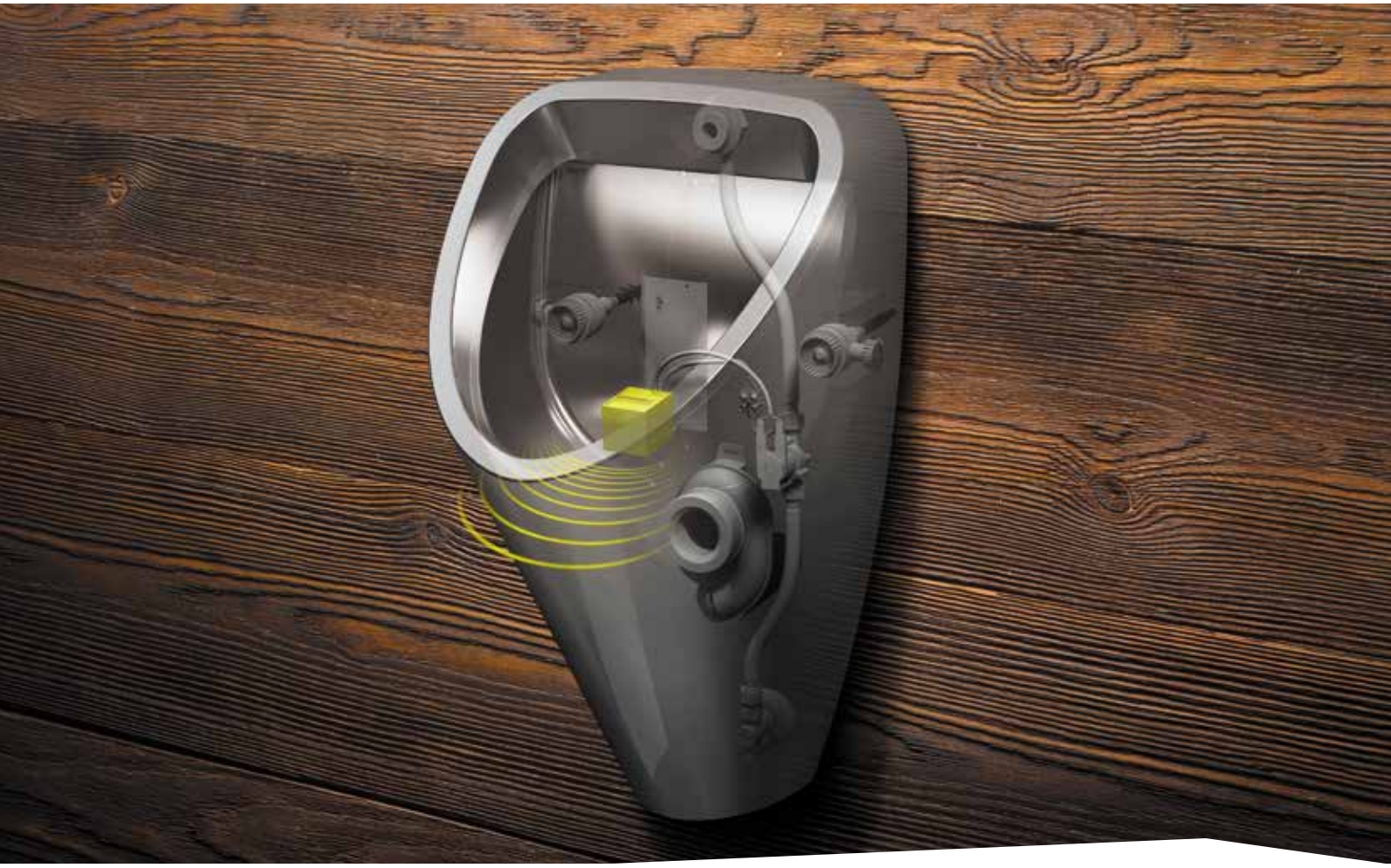

AUTOMATIC FLUSHING AFTER EACH USE OF THE URINAL

SYSTEM ANALYSES CHANGES, WHICH ARE PROCEEDED INSIDE OF THE URINAL

ECONOMY FLUSHING BY 1 LITER OF WATER

VANDAL-PROOF

PRODUCT MEETS THE REQUIREMMENTS OF HIGH RESISTANCE TO MECHANICAL DEMAGES AND WEARS

CLEAN DESIGN

WHOLE SYSTEM IS PLACED BEHIND THE URINAL

5 YEARS GUARANTEE

ADJUSTMENT OF PARAMETERS BY REMOTE CONTROL

PARAMETERS ARE POSSIBLE TO ADJUST WITHOUT DISASSEMBLY OF THE URINAL

HYGIENIC FLUSH

AUTOMATIC FLUSHING AFTER EACH 6 HOURS NON-USE

PROTECTION AGAINST OVERFLOW

EASY INSTALLATION

LONG LIFE

UP TO THREE LIFE OF THE STANDARD PRODUCTS

MADE IN EUROPE

SANITARY ELECTRONICS

Power supplies:

SLZ 01Z - **Order no. 05011** External power supply 230 V AC/ 24 V DC
SLZ 01Y - **Order no. 05012** External power supply 230 V AC/ 24 V DC
SLZ 04Y - **Order no. 05042** External power supply 85-240V AC / 24V DC for mounting on DIN rail in switchboard
SLZ 04Z - **Order no. 05041** External power supply 85-240V AC / 24V DC for mounting on DIN rail in switchboard
SLZ 04X - **Order no. 10049** External power supply 85-240V AC / 24V DC for mounting on DIN rail in switchboard
SLZ 05 - **Order no. 05050** Power supply for battery operated products (alternative to 9V / 6V battery)
SLZ 06 - **Order no. 05060** External power supply for 1 washbasin tap with one valve 230V AC / 24V DC
SLZ 07 - **Order no. 05070** External power supply 230V AC / 24V DC for wall socket
SLZ 08 - **Order no. 05080** Wall socket external power supply 230V AC / 12V for battery operated products

Installation recommendations:

- installation of the electrical set has to conform with the provided norms and it could be done only by the skilled person
- power supplies SLZ 01Y, SLZ 01Z, SLZ 06 is possible to mount on the surface, eventually it could be embedded to the wall outside of users reach (e. g. ceiling, vestibule)
- for the operating voltage supply is recommended to use line wire CYKY 2C x 1,5, for the 24 V DC output voltage distribution wire line CYKY 2A x 1,5 (max. 40 m)
- the output from the built-in power supply is made up of a twin-lead connection that connects to the electricity terminals, 230 V/50 Hz, supply cable is fed into the mounting box via a grommet
- after the control of right function of the product with integrated power supply (with index Z) it is necessary the cover with electronics tightly seal around the perimeter by a sanitary sealant that the water cannot penetrate into space where is placed the network transformator

Article No.	Automatic washbasin taps and shower controls	Automatic urinal flushing unit	Automatic pressure toilet flushing units SLW 01xx	Automatic cistern toilet flushing unit SLW 02xx	Dimensions (mm)
SLZ 01Y	max. 5 valves	max. 5 valves	max. 5 valves	–	140 x 100 x 60
SLZ 01Z	max. 9 valves	max. 9 valves	max. 9 valves	max. 2 magnets	170 x 130 x 80
SLZ 04Y	max. 5 valves	max. 5 valves	max. 5 valves	–	78 x 93 x 56
SLZ 04Z	max. 9 valves	max. 9 valves	max. 9 valves	max. 2 magnets	78 x 93 x 56
SLZ 04X	max. 15 valves	max. 15 valves	max. 15 valves	max. 3 magnets	100 x 93 x 56
SLZ 06	max. 1 valve	max. 1 valve	max. 1 valve	–	90 x 65 x 45
SLZ 07	max. 2 valves	max. 2 valves	max. 2 valves	–	75 x 34 x 43
SLZ 08	max. 1 valve	max. 1 valve	–	–	61 x 28 x 22

AUTOMATIC INFRA-RED AND PIEZO WASHBASIN TAPS

SLU 01N, 01NH

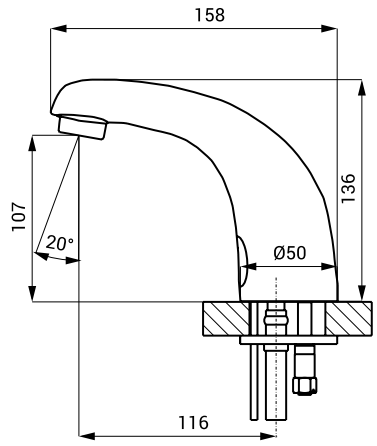

SLU 02N, 02NH

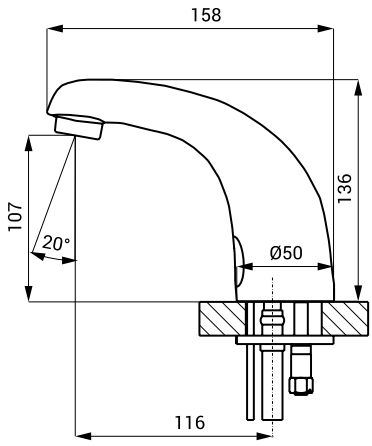

SLU 08, 08N

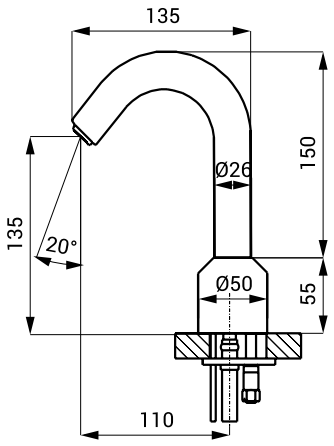

SLU 08D, 08ND

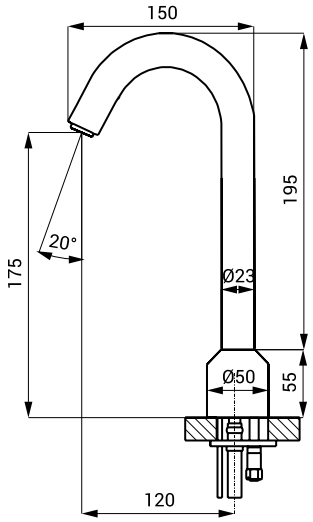

SLU 15

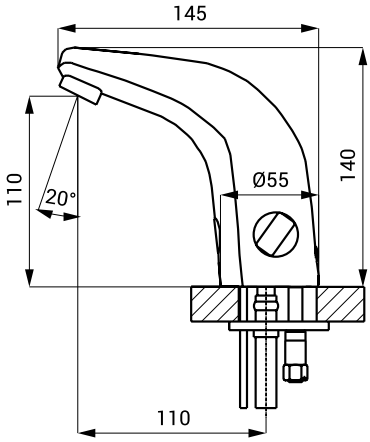

SLU 16

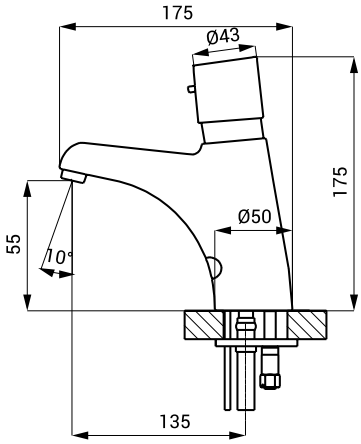

SLU 21, 22

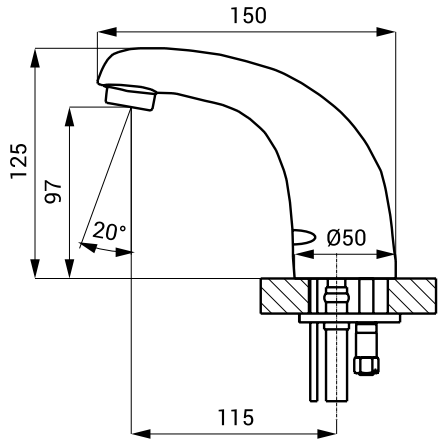

SLU 37

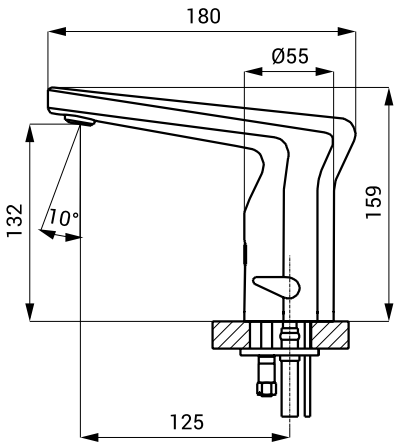

SLU 45, 46

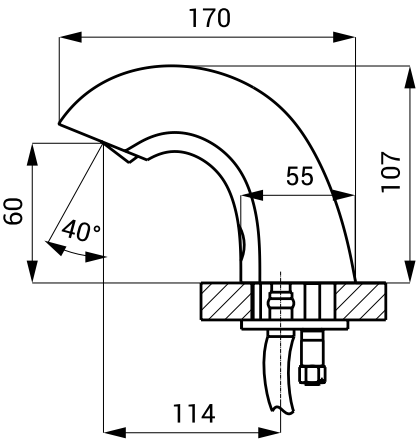

AUTOMATIC INFRA-RED AND PIEZO WASHBASIN TAPS

SLU 45MD, 46MD

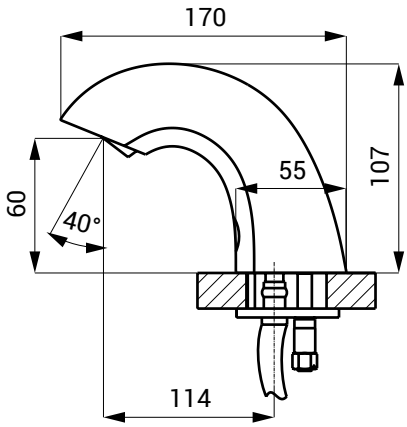

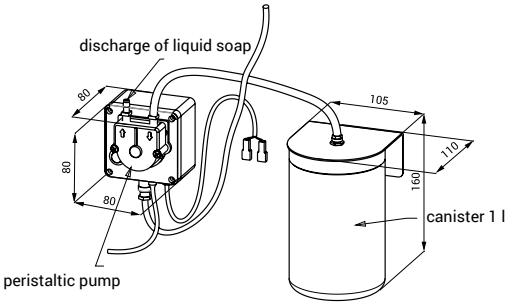

SLU 54

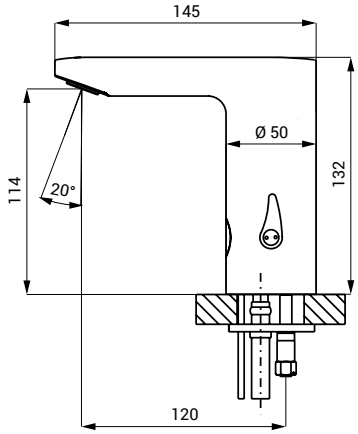

SLU 60

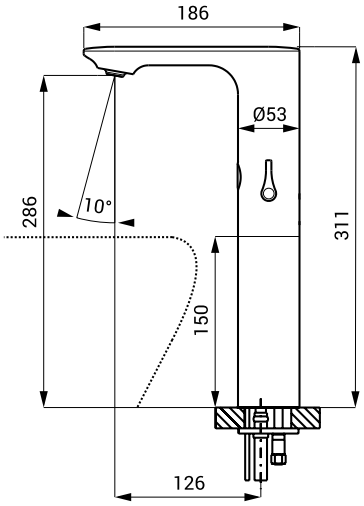

SLU 63

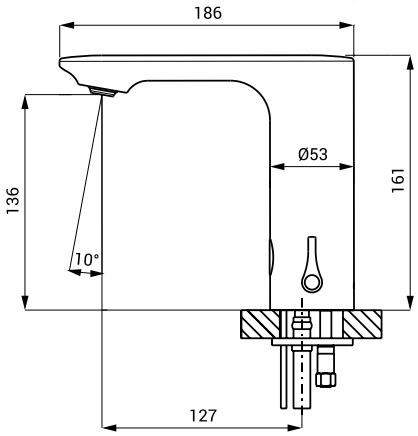

SLU 76

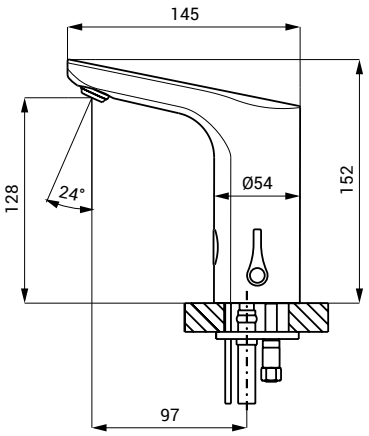

SLU 83

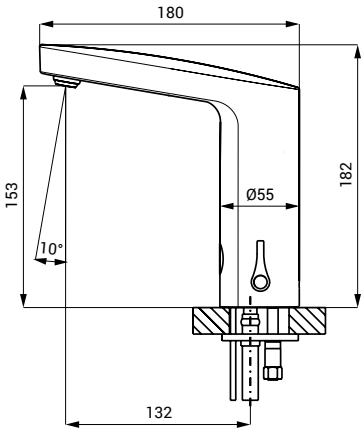

SLU 91(D) - 93(D)

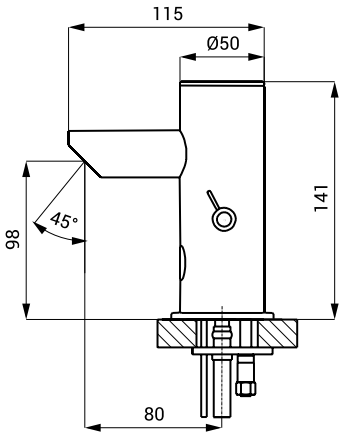

SLU 91P(D) - 93P(D)

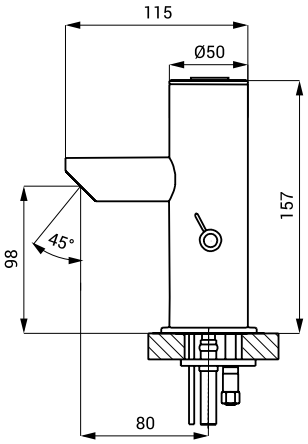

AUTOMATIC INFRA-RED SINK TAPS

SLU 03D

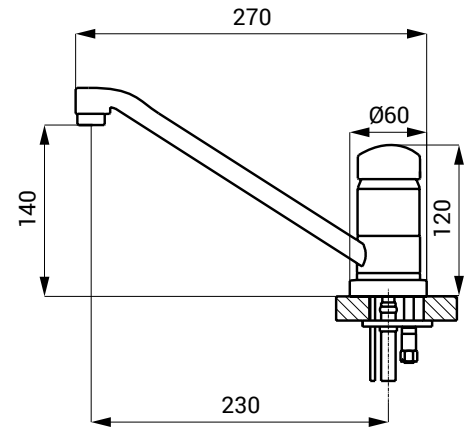

SLU 10

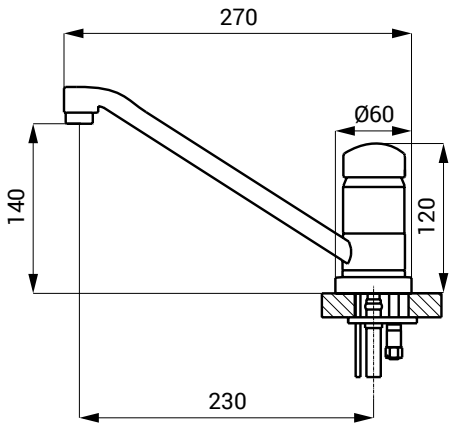

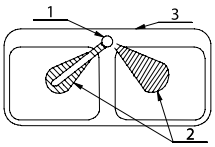

1 - automatic sink mixer
2 - active range
3 - double-sink

SLU 23D

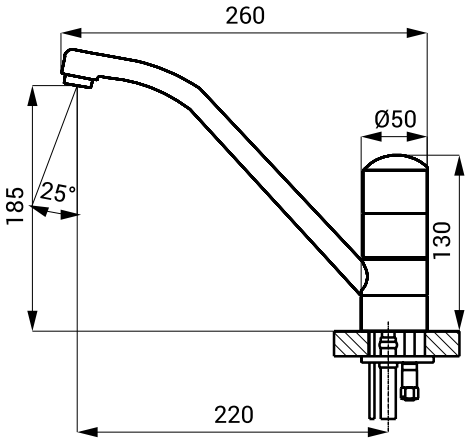

SLU 24D

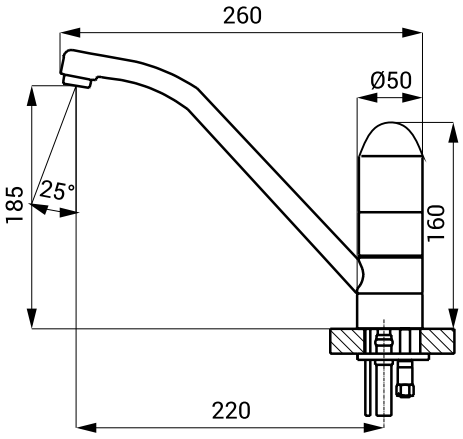

AUTOMATIC INFRA-RED AND PIEZO WALL-MOUNTED WASHBASIN TAPS

SLU 04H, 04HT

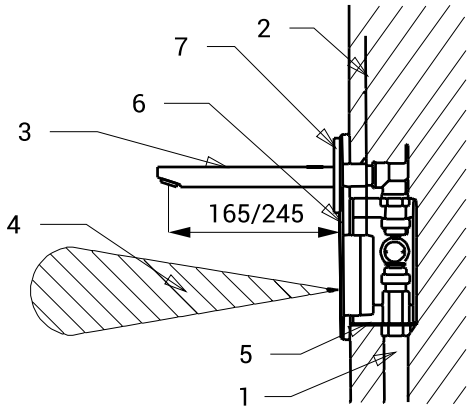

1 - water supply
2 - feed cable from power supply
3 - spout
4 - active range
5 - mounting box
6 - stainless steel cover with electronics
7 - protective cover

SLU 04P

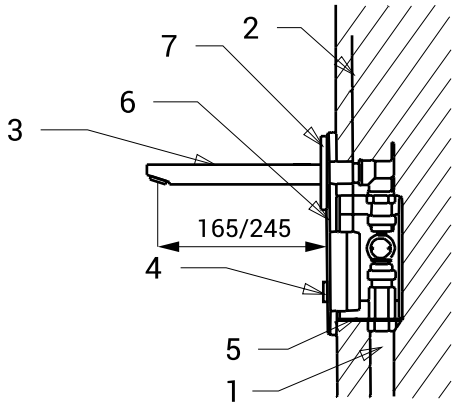

1 - water supply
2 - feed cable from power supply
3 - spout
4 - piezo buton
5 - mounting box
6 - stainless steel cover with electronics
7 - protective cover

SLU 25

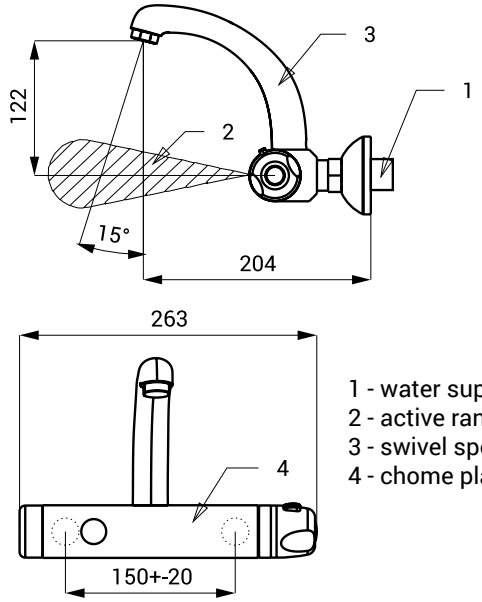

1 - water supply
2 - active range
3 - swivel spout
4 - chome plated body

SLU 25S

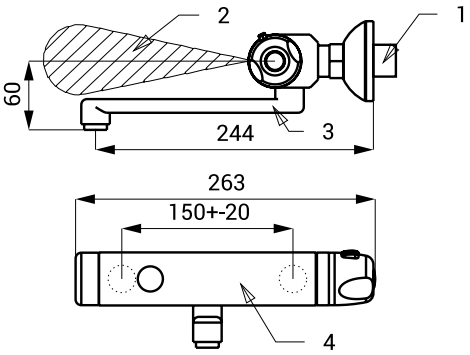

1 - water supply
2 - active range
3 - swivel spout
4 - chome plated body

SLU 39, 39X

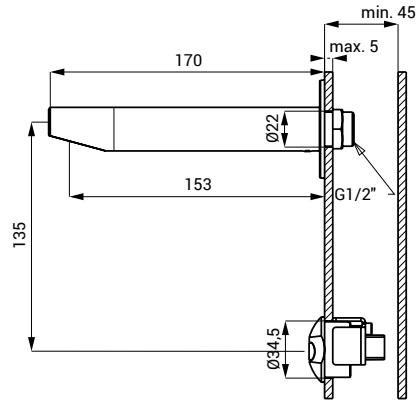

Set for the mounting into the wall

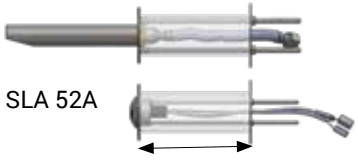

max. 300 mm

SLU 39PX

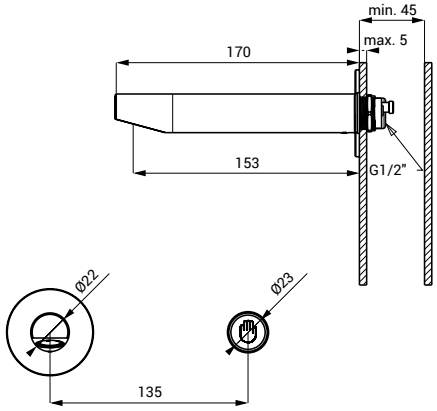

Set for the mounting into the wall

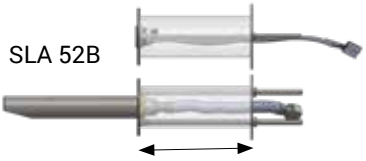

max. 300 mm

SLU 42KB

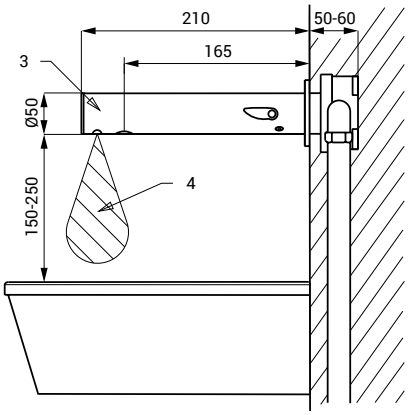

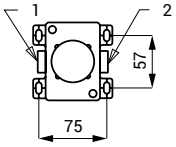

1 - hot water supply
2 - cold water supply
3 - spout with electronics
4 - active range

SLU 43B, 43KB

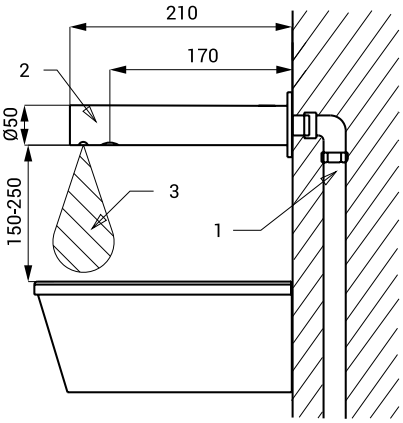

1 - water supply pipe
2 - spout
3 - active range

AUTOMATIC INFRA-RED AND PIEZO WALL-MOUNTED WASHBASIN TAPS

SLU 44P

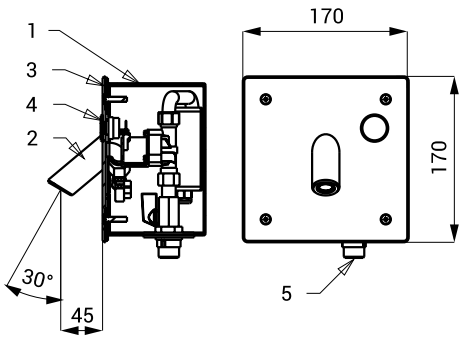

1 - stainless steel mounting box
with electromagnetic valve
and ball valve
2 - spout
3 - vandal-proof stainless steel cover
4 - piezo button
5 - water inlet

SLU 44PP

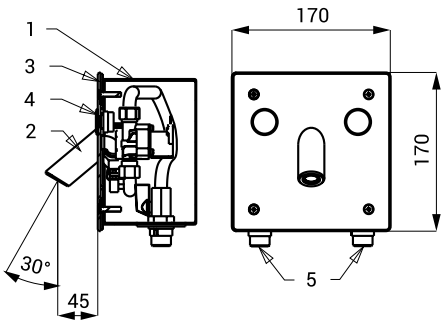

1 - stainless steel mounting box
with electromagnetic valve
and ball valves
2 - spout
3 - vandal-proof stainless steel cover
4 - piezo buttons
5 - water inlets

AUTOMATIC INFRA-RED, PIEZO AND MECHANICAL URINAL FLUSHING UNITS

SLP 17 DOMINO

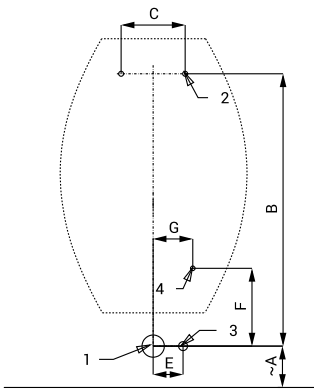

1 - waste pipeline Ø 40 mm
2 - holes for fitting
3 - water supply
4 - power supply 24 V DC

SLP 07 ALEX

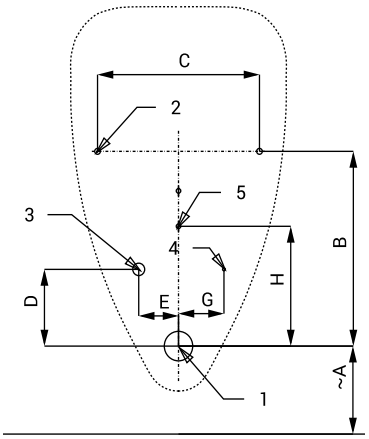

1 - waste pipeline Ø 50 mm
2 - holes for fitting
3 - water supply
4 - power supply
5 - holes for wall plugs

SLP 07 FELIX

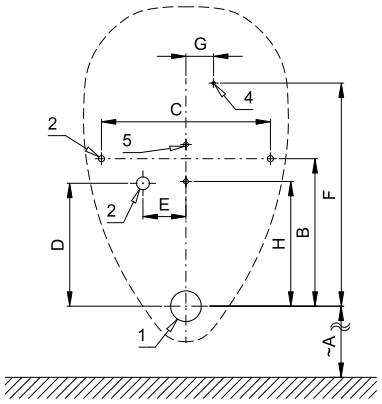

1 - waste pipeline Ø 50 mm
2 - holes for fitting
3 - water supply
4 - power supply
5 - holes for wall plugs

SLP 07 NOVA PRO

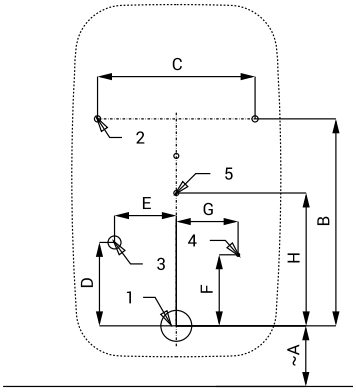

1 - waste pipeline Ø 50 mm
2 - holes for fitting
3 - water supply
4 - power supply
5 - holes for wall plugs

SLP 07 RENOVA NR. PLAN 1

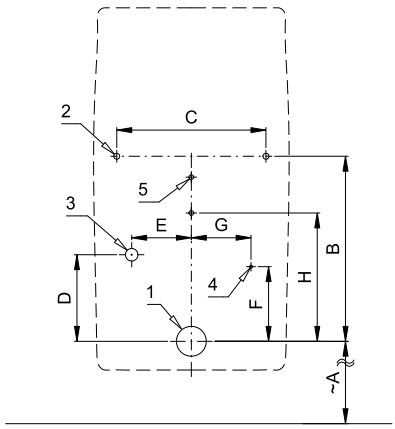

1 - waste pipeline Ø 50 mm
2 - holes for fitting
3 - water supply
4 - power supply
5 - holes for wall plugs

SLP 07 RENOVA NR. 1

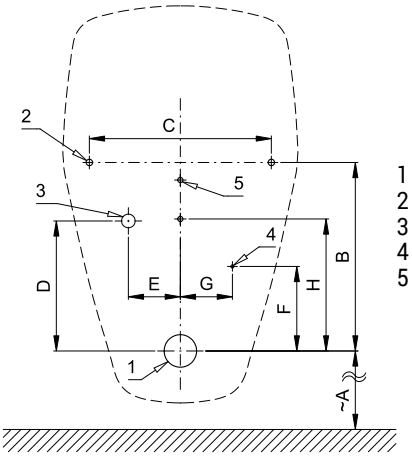

1 - waste pipeline Ø 50 mm
2 - holes for fitting
3 - water supply
4 - power supply
5 - holes for wall plugs

Dimensions (mm)	A	B	C	D	E	F	G	H
SLP 17	420	638	150		70	180	90	
ALEX	320	330	285	130	70		80	203
FELIX	390	240	275	200	70	360	45	205
NOVA PRO	380	335	255	135	100	115	100	215
RENOVA Nr. 1	390	290	280	200	80	130	80	203
RENOVA Nr. 1 PLAN	390	310	250	145	100	125	100	215

AUTOMATIC INFRA-RED, PIEZO AND MECHANICAL URINAL FLUSHING UNITS

SLP 12 VILA

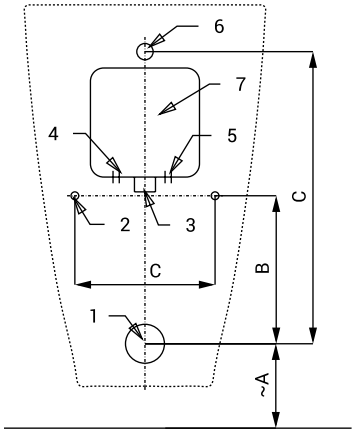

1 - waste pipeline Ø 50 mm
2 - holes for fitting
3 - water supply
4 - power supply 230 V AC (variant SLP 12/37RZ)
5 - power supply 24 V DC (variant SLP 12/37R)
6 - inlet fitting
7 - mounting box

SLP 19 GOLEM

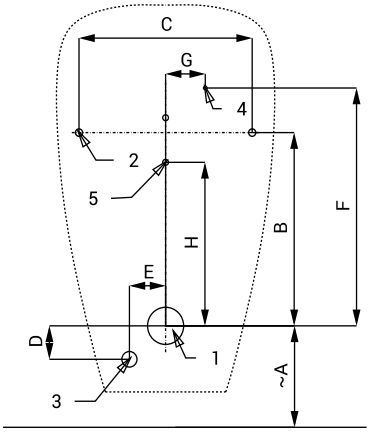

1 - waste pipeline Ø 50 mm
2 - holes for fitting
3 - water supply
4 - power supply 24 V DC or 230 V AC
5 - holes for wall plugs

SLP 20 ANTERO

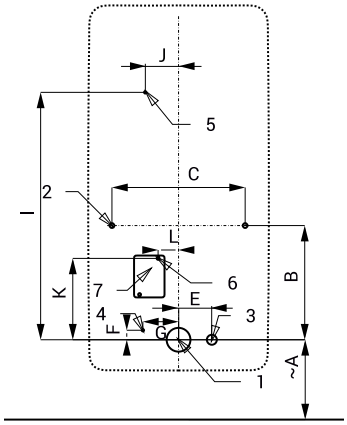

1 - waste pipeline Ø 50 mm
2 - holes for fitting
3 - water supply
4 - power supply 230 V AC (variant SLP 20RZ)
5 - power supply 24 V DC (variant SLP 20R)
6 - holes for wall plugs
7 - power supply

SLP 23 CAPRINO

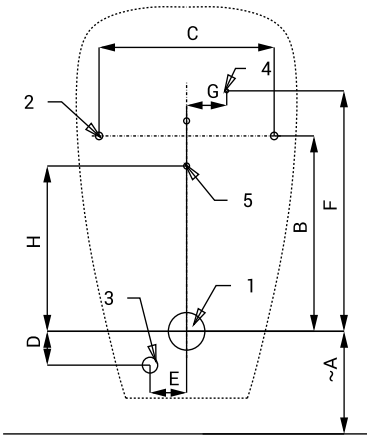

1 - waste pipeline Ø 50 mm
2 - holes for fitting
3 - water supply
4 - power supply 24 V DC or 230 V AC
5 - holes for wall plugs

SLP 24, 25 ALESSI

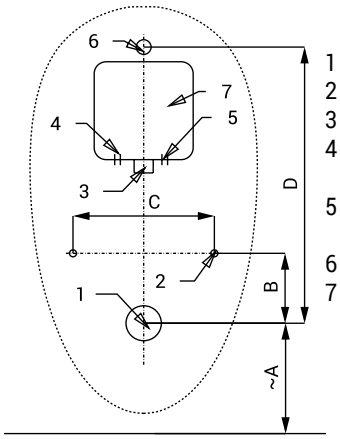

1 - waste pipeline Ø 50 mm
2 - holes for fitting
3 - water supply
4 - power supply 230 V AC (variant SLP 24/25RZ)
5 - power supply 24 V DC (variants SLP 24/25R)
6 - inlet fitting
7 - mounting box

SLP 31 LIVO

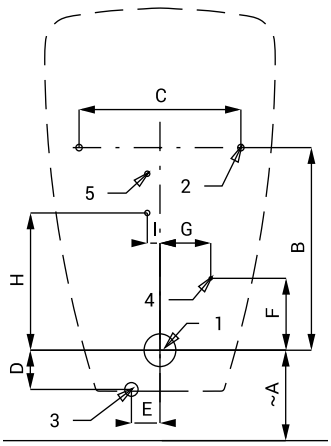

1 - waste pipeline Ø 50 mm
2 - holes for fitting
3 - water supply
4 - power supply 24 V DC or 230 V AC
5 - holes for wall plugs

Dimensions (mm)	A	B	C	D	E	F	G	H	I	J	K	L
SLP 12	415	190	180	375								
SLP 19	400	260	240	45	50	320	55	220				
SLP 20	350	240	280		70	20	75		520	70	171	43
SLP 23	400	260	240	45	50	320	55	220				
SLP 24	420	100	200	395								
SLP 25	420	100	200	395								
SLP 31	390	310	255	60	45	110	80	210	20			

AUTOMATIC INFRA-RED, PIEZO AND MECHANICAL URINAL FLUSHING UNITS

SLP 32 ARQ

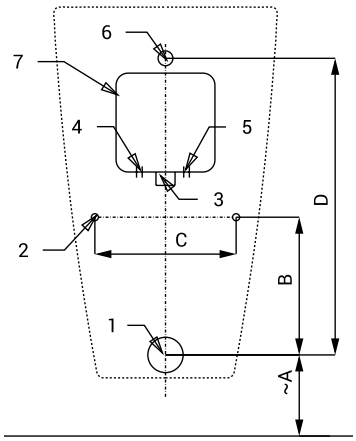

1 - waste pipeline Ø 50 mm
2 - holes for fitting
3 - water supply
4 - power supply 230 V AC
(variant SLP 32RZ)
5 - power supply 24 V DC
(variant SLP 32R)
6 - inlet fitting
7 - mounting box

SLP 33 CASA

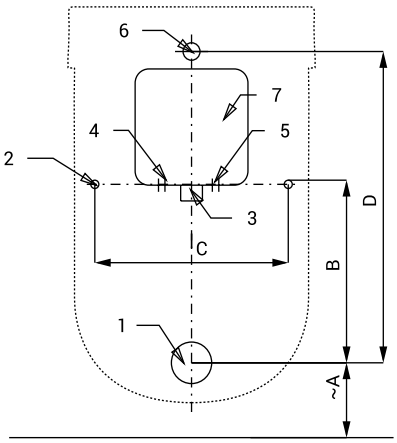

1 - waste pipeline Ø 50 mm
2 - holes for fitting
3 - water supply
4 - power supply 230 V AC
(variant SLP 33RZ)
5 - power supply 24 V DC
(variant SLP 33R)
6 - inlet fitting
7 - mounting box

SLP 36 ECCO (Golf)

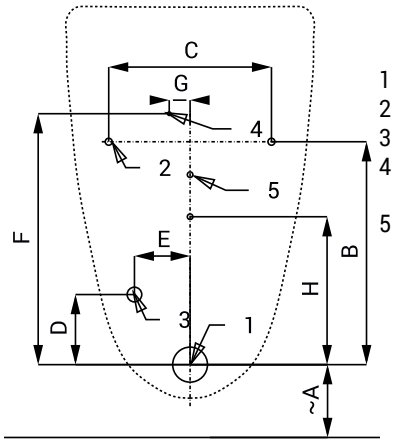

1 - waste pipeline Ø 50 mm
2 - holes for fitting
3 - water supply
4 - power supply 24 V DC
or 230 V AC
5 - holes for wall plugs

SLP 37 VILA

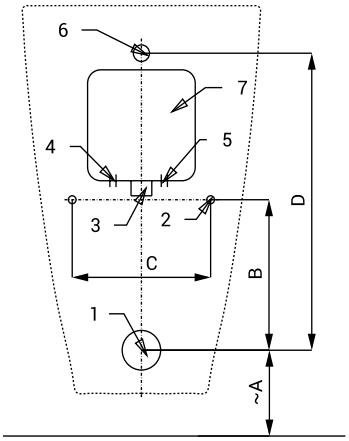

1 - waste pipeline Ø 50 mm
2 - holes for fitting
3 - water supply
4 - power supply 230 V AC
(variant SLP 12/37RZ)
5 - power supply 24 V DC
(variant SLP 12/37R)
6 - inlet fitting
7 - mounting box

SLP 49 CAPRINO PLUS

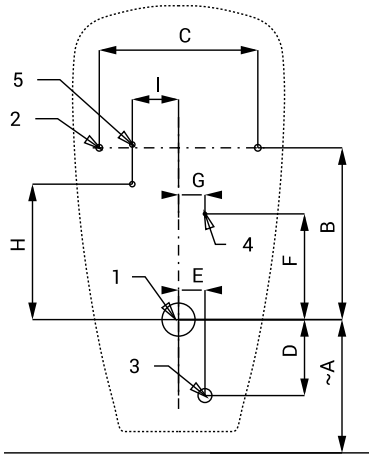

1 - waste pipeline Ø 50 mm
2 - holes for fitting
3 - water supply
4 - power supply 24 V DC
or 230 V AC
5 - holes for wall plugs

SLP 54 D-CODE

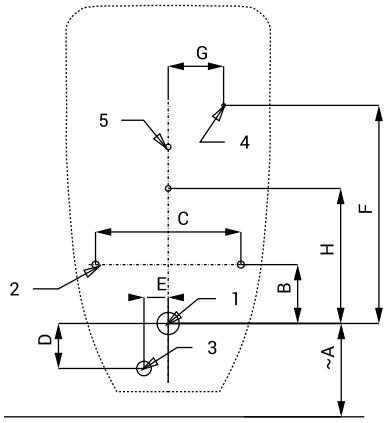

1 - waste pipeline Ø 32 mm
2 - holes for fitting
3 - water supply
4 - power supply 24 V DC
or 230 V AC
5 - holes for wall plugs

Dimensions (mm)	A	B	C	D	E	F	G	H	I
SLP 32	390	195	200	420					
SLP 33	415	215	240	375					
SLP 36	365	318	234	100	80	358	30	211	
SLP 37	415	190	180	375					
SLP 49	400	260	240	115	40	160	40	205	70
SLP 54	480	85	210	65	35	315	80	195	

AUTOMATIC INFRA-RED, PIEZO AND MECHANICAL URINAL FLUSHING UNITS

SLP 59 LEMA

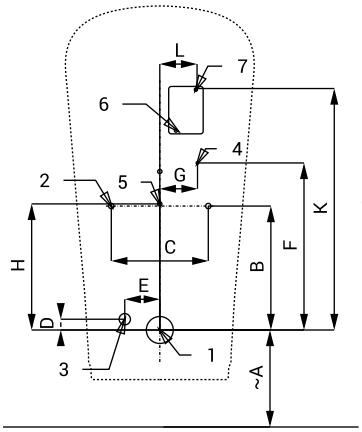

1 - waste pipeline Ø 50 mm
2 - holes for fitting
3 - water supply
4 - power supply 24 V DC
or 230 V AC
5 - holes for wall plugs
6 - holes for wall plugs
7 - power supply

SLP 68 ARCHITECTURA

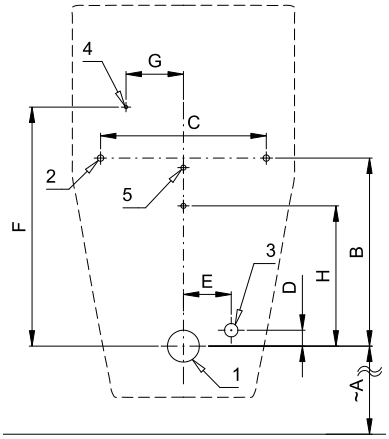

1 - waste pipeline Ø 50 mm
2 - holes for fitting
3 - water supply
4 - power supply
5 - holes for wall plugs

SLP 69 ARCHITECTURA

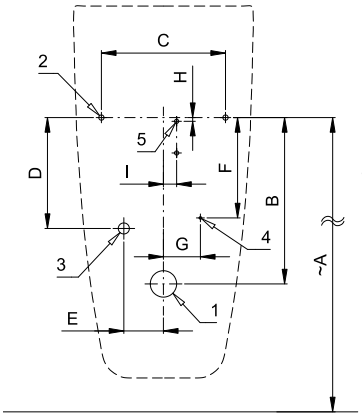

1 - waste pipeline Ø 50 mm
2 - holes for fitting
3 - water supply
4 - power supply
5 - holes for wall plugs

SLP 70 O.NOVO

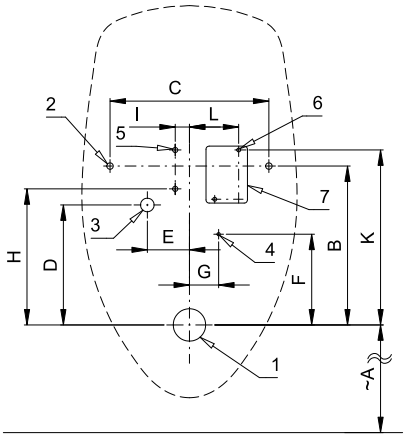

1 - waste pipeline Ø 50 mm
2 - holes for fitting
3 - water supply
4 - power supply
5 - holes for wall plugs
6 - holes for wall plugs
7 - power supply

SLP 71 SUBWAY

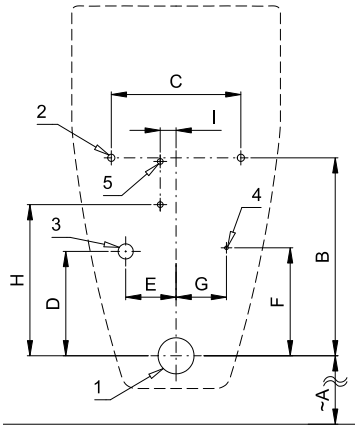

1 - waste pipeline Ø 50 mm
2 - holes for fitting
3 - water supply
4 - power supply
5 - holes for wall plugs

Dimensions (mm)	A	B	C	D	E	F	G	H	I	J	K	L
SLP 59	350	230	180	20	65	310	70	234			446	67
SLP 68	390	295	260	25	75	375	90	220				
SLP 69	675	315 - 375	235	210	75	190	70	7	25			
SLP 70	390	245	245	185	65	140	45	210	22	270	76	
SLP 71	405	275	180	145	70	150	70	210	22			

STAINLESS STEEL WASHBASINS

SLUN 01

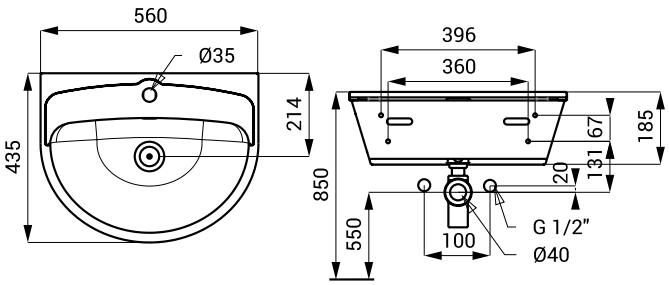

SLUN 02

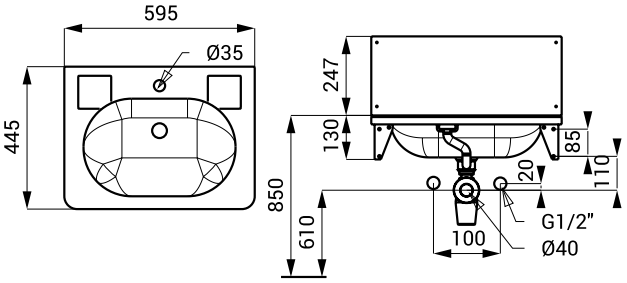

SLUN 11

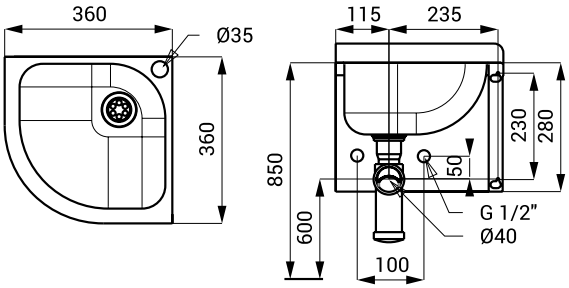

SLUN 13

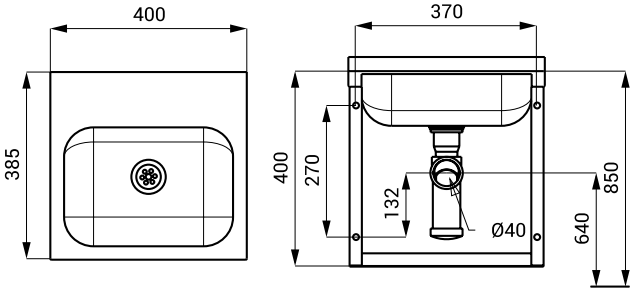

SLUN 17

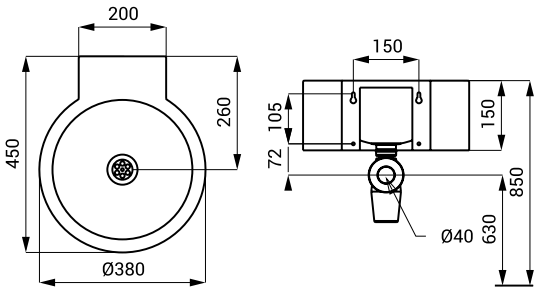

SLUN 19, 20, 60, 61

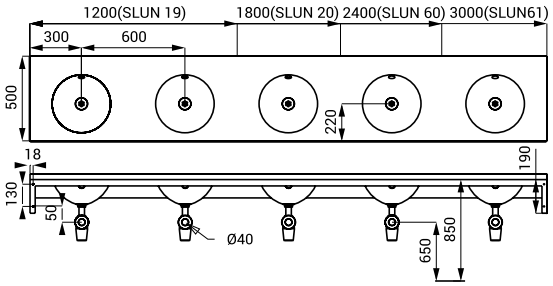

SLUN 19P, 20P, 60P, 61P

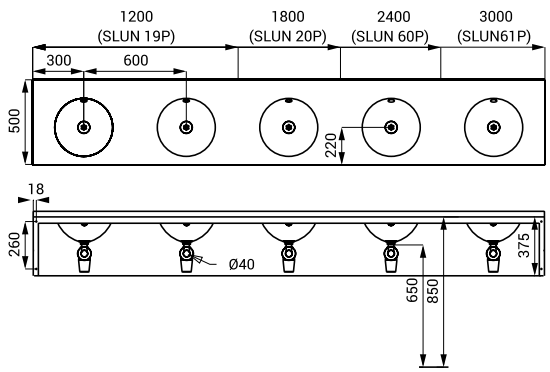

SLUN 22M

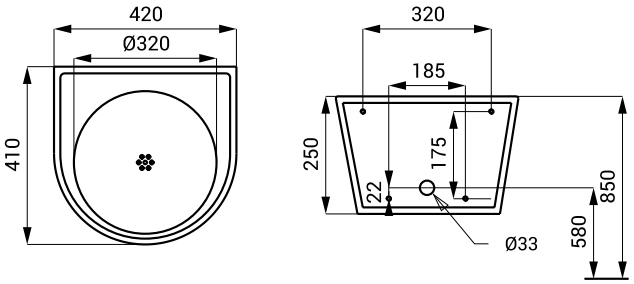

STAINLESS STEEL WASHBASINS

SLUN 24X

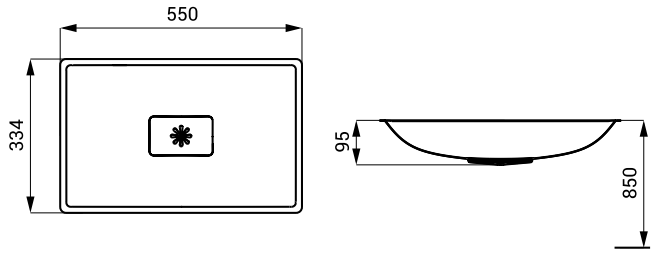

SLUN 25X

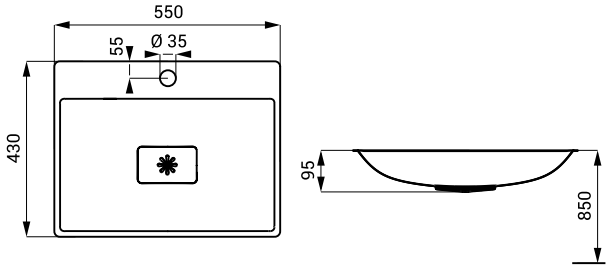

SLUN 26

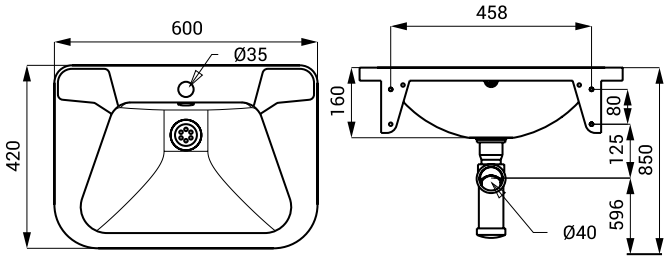

SLUN 26A

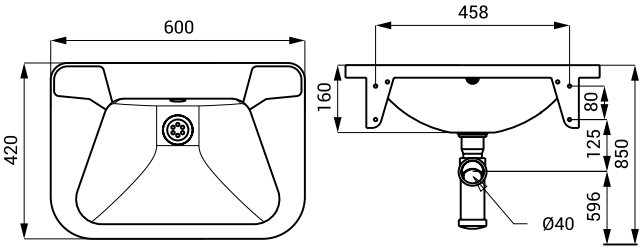

SLUN 28A

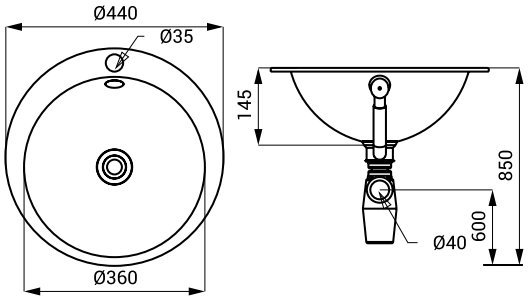

SLUN 32, 32X

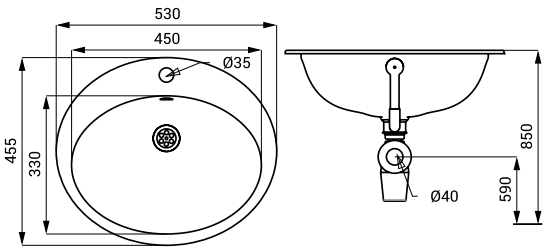

SLUN 34

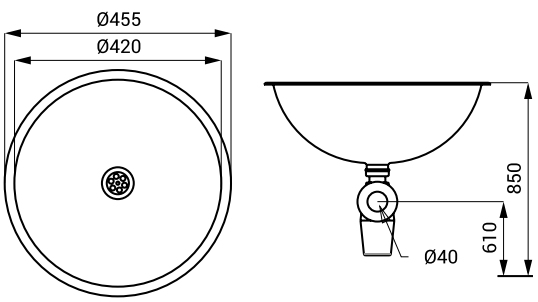

SLUN 36A

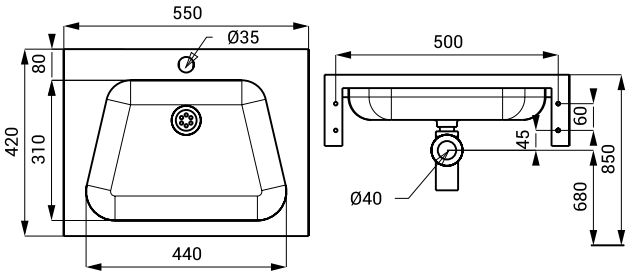

STAINLESS STEEL WASHBASINS

SLUN 41M

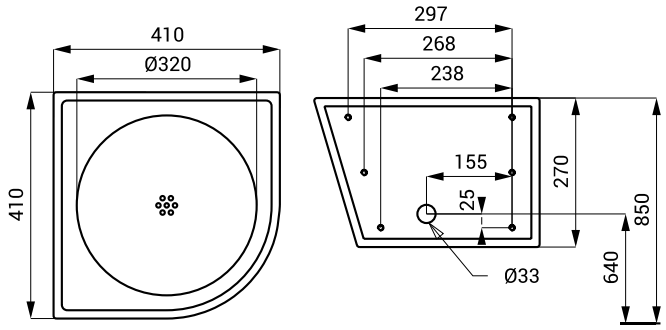

SLUN 44, 44X

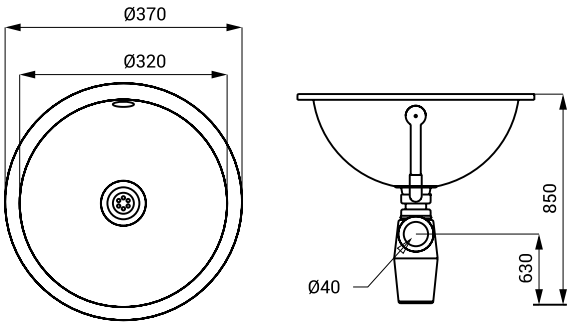

SLUN 45, 45X

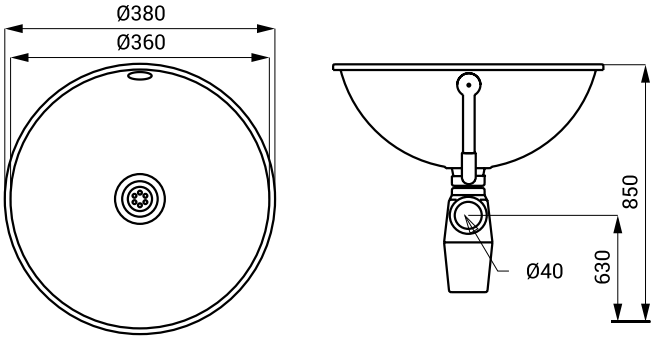

SLUN 47, 47X

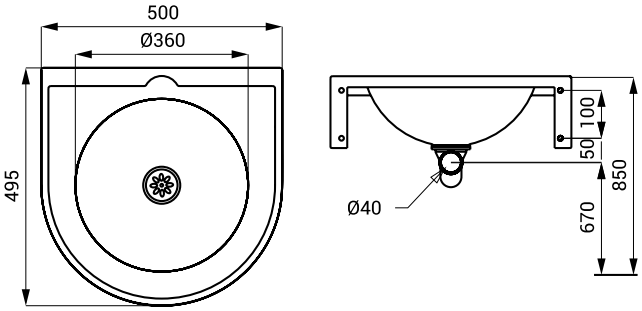

SLUN 57

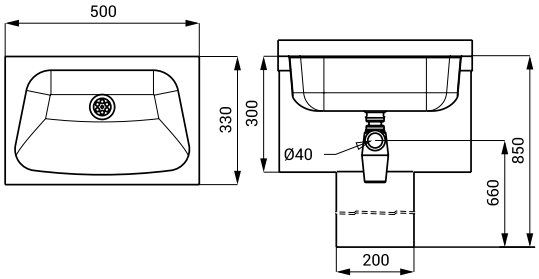

SLUN 58

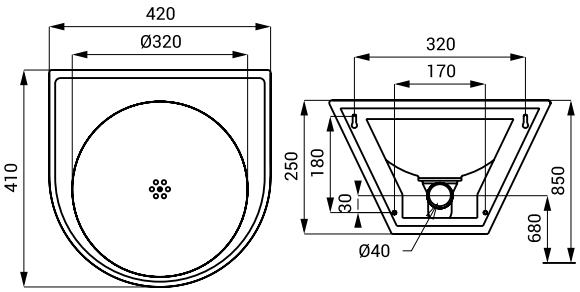

SLUN 59

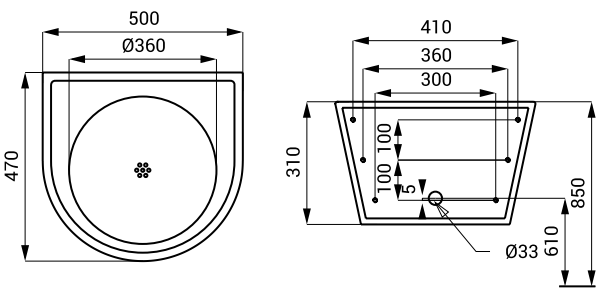

SLUN 64

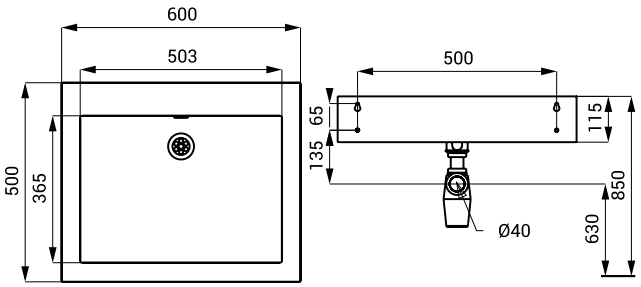

STAINLESS STEEL WASHBASINS

SLUN 65

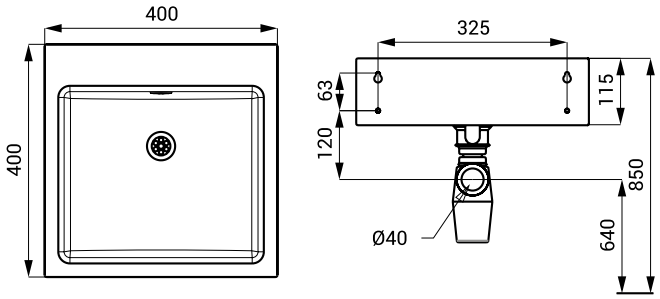

SLUN 66

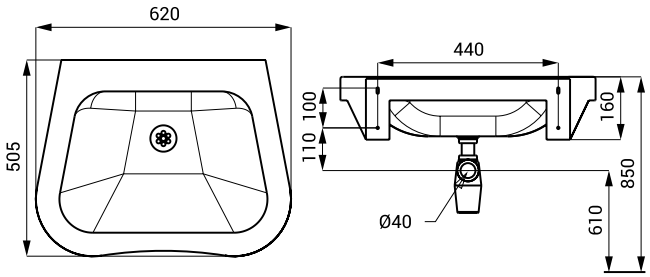

SLUN 68

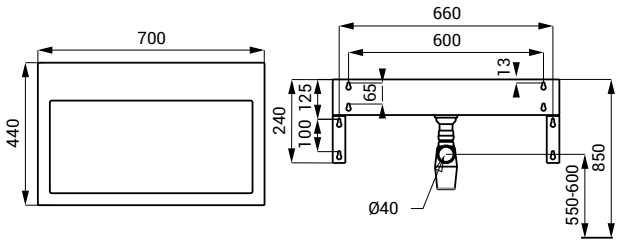

SLUN 69

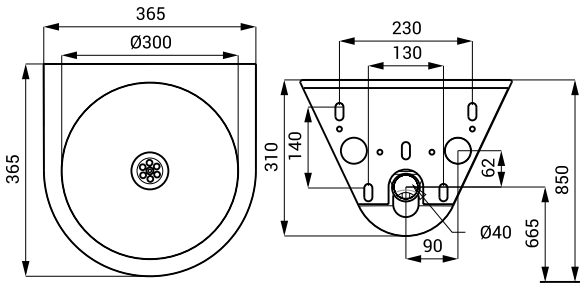

SLUN 70H

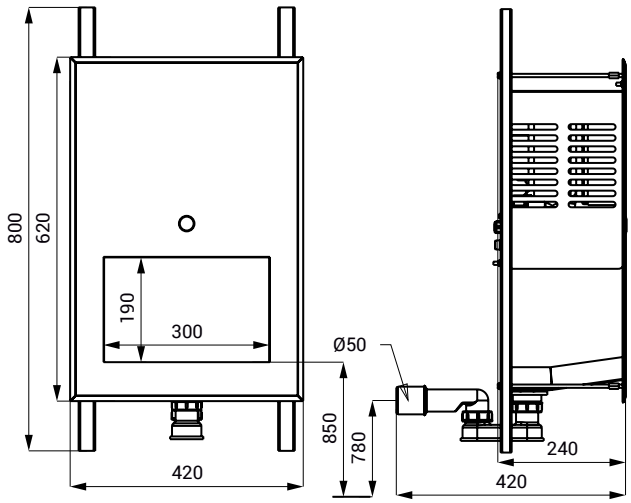

SLUN 70P

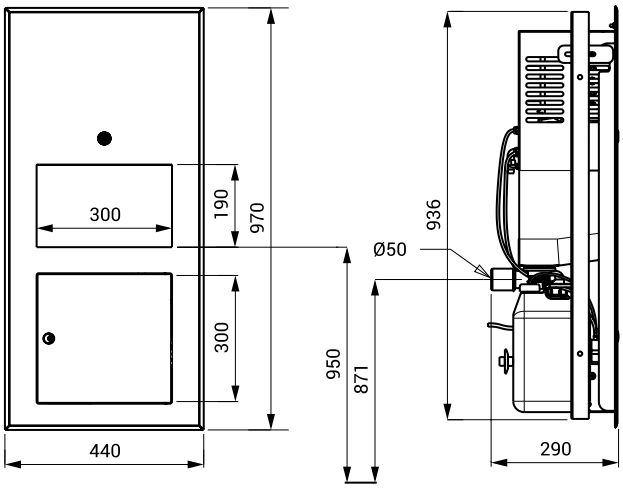

SLUN 71E, 71P

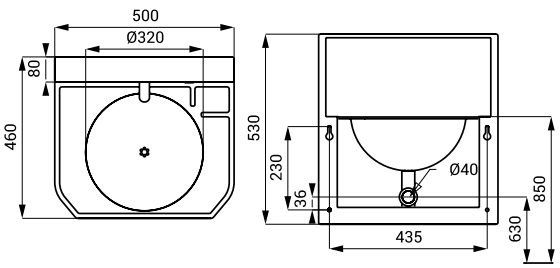

SLUN 75E, 76E, 76ET

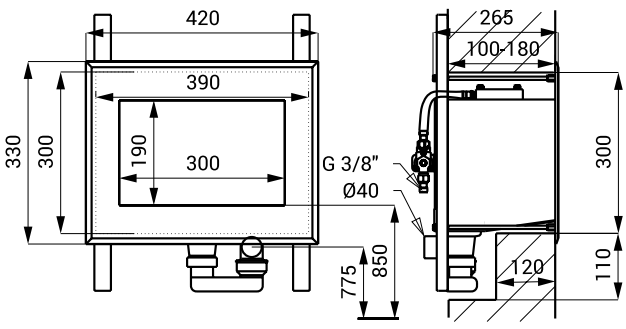

STAINLESS STEEL DRINKING FOUNTAINS

SLUN 14, 14E

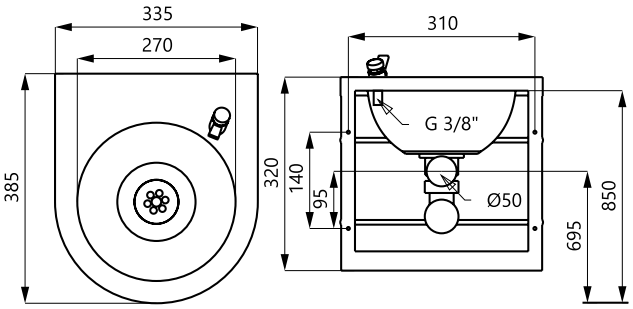

SLUN 62, 62E, 62S

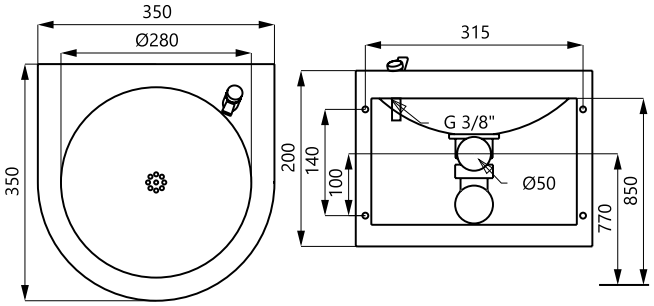

SLUN 23, 23E

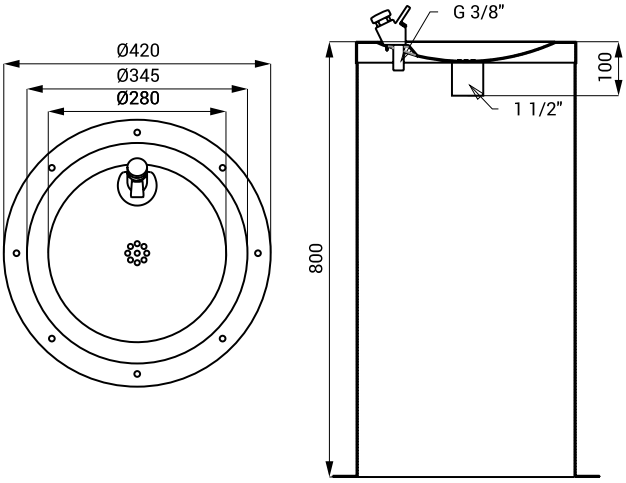

SLUN 23M

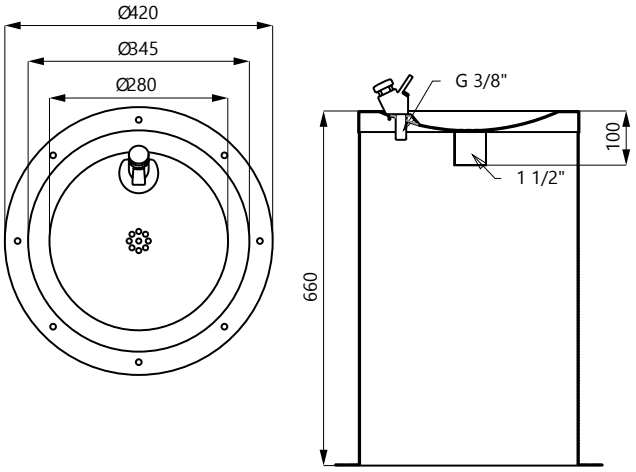

SLUN 43, 43C, 43E

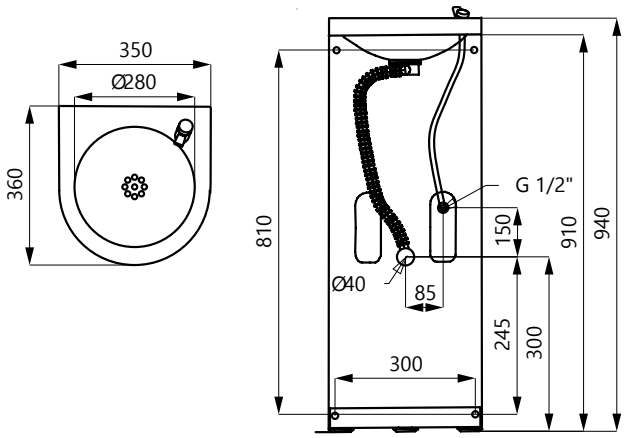

SLUN 43S, 43CS

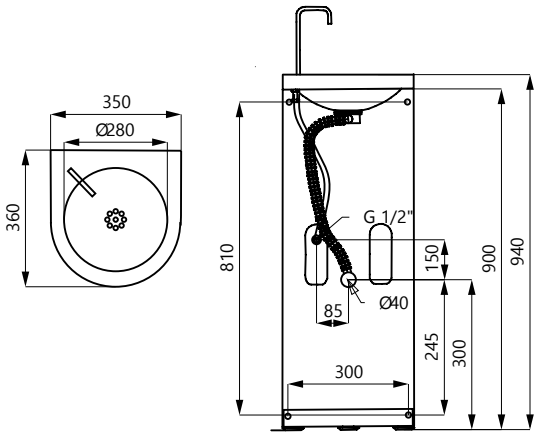

STAINLESS STEEL WASHING TROUGHS

SLUN 10, 10L

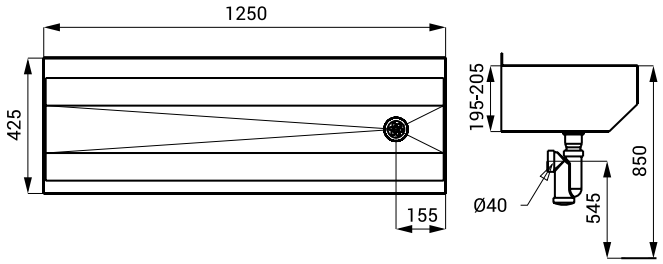

SLUN 10P, 10PL

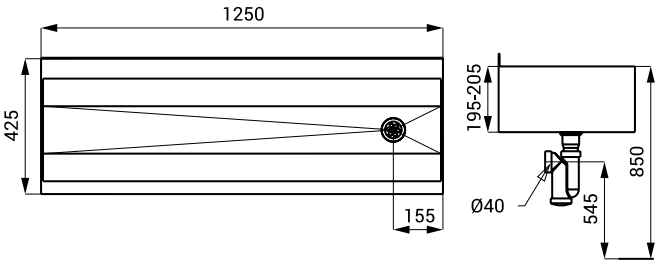

SLUN 10K, 10KL

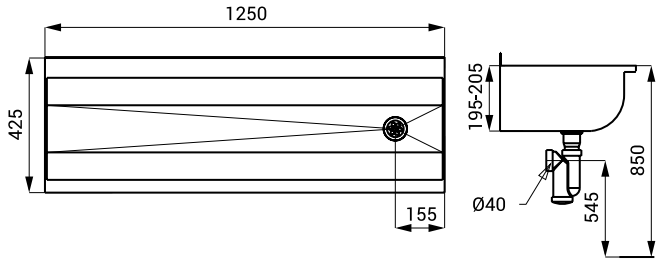

SLUN 10PA

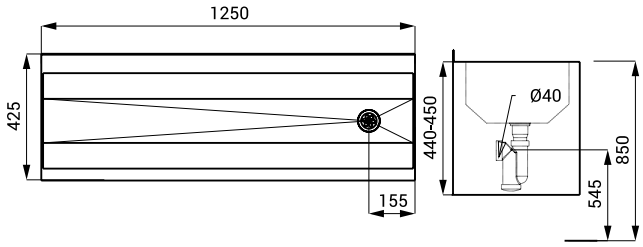

SLUN 50EA

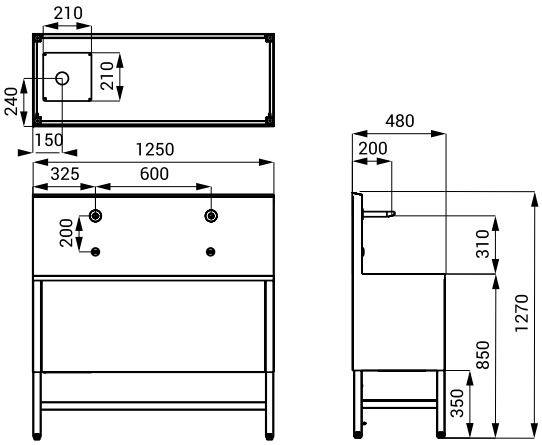

SLUN 50E(T) - 53E(T)

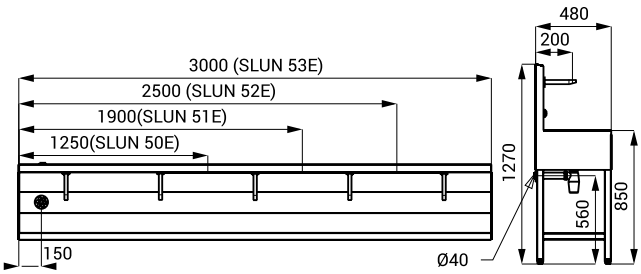

SLUN 50PA

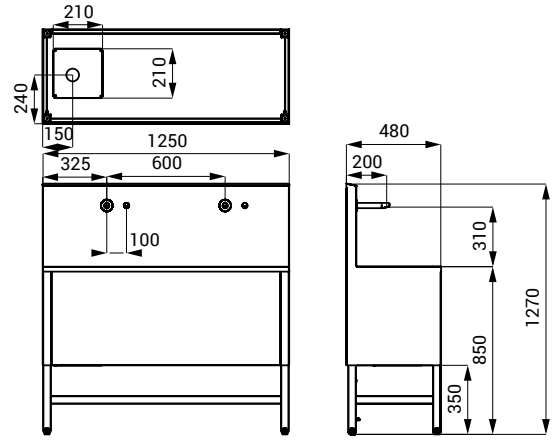

SLUN 54(L), 55(L), 56(L)

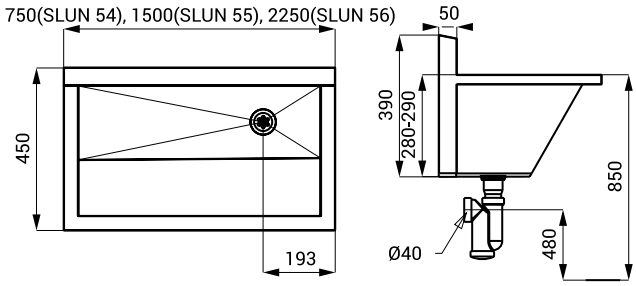

STAINLESS STEEL WASHING TROUGHS

SLUN 80EA

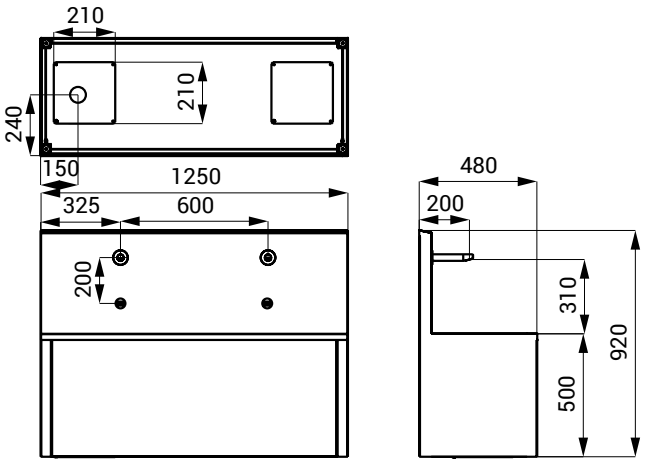

SLUN 80E(T) - 83(T)

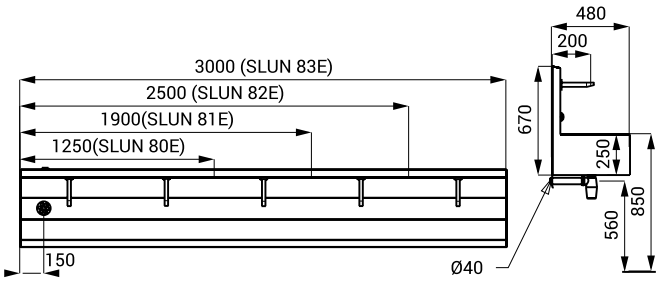

SLUN 80PA

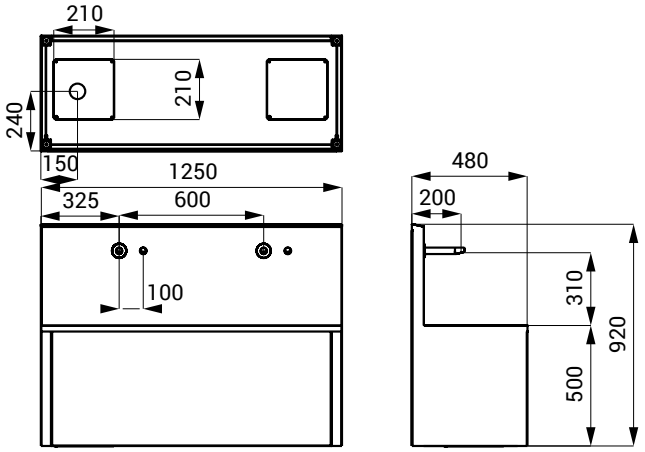

STAINLESS STEEL SINKS

SLUN 03

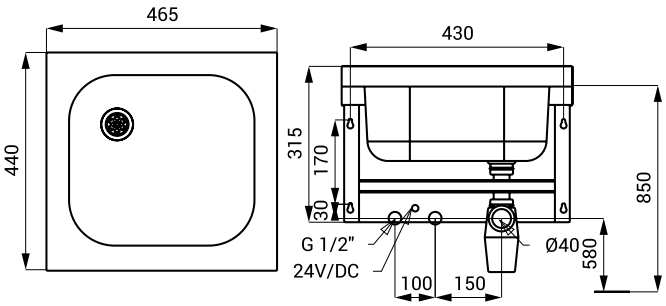

SLUN 04E, 04ET

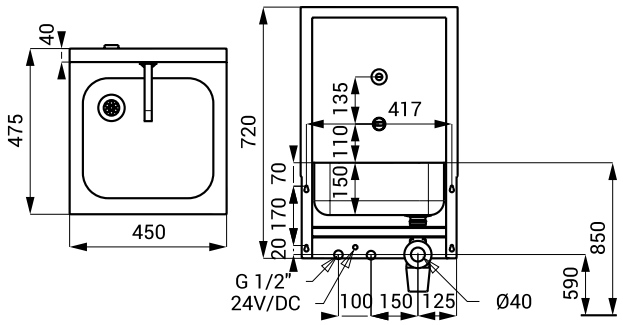

SLUN 06

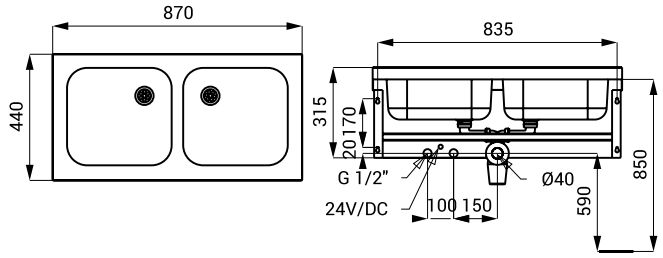

SLUN 07E, 07ET

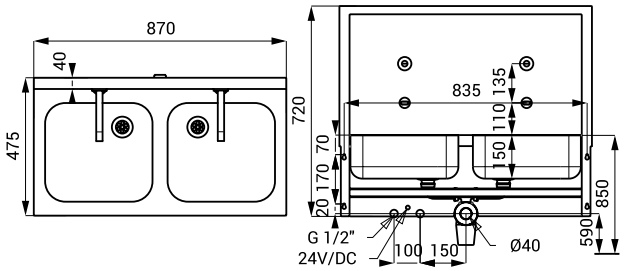

SLUN 15

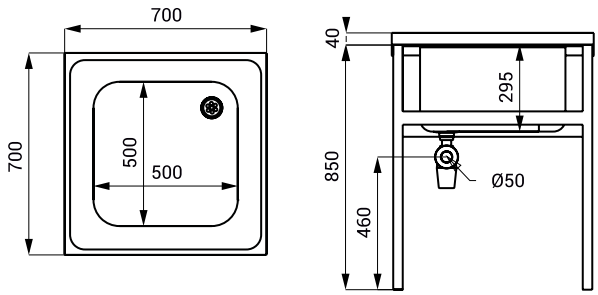

SLUN 16

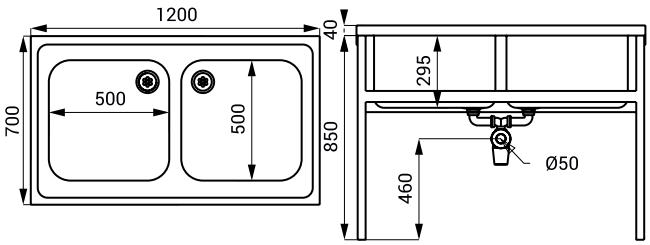

STAINLESS STEEL URINALS AND URINAL TROUGHS

SLPN 06

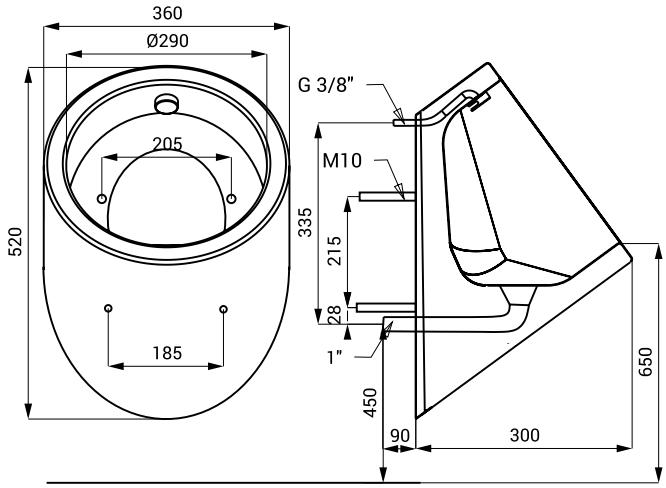

SLPN 07, 07E

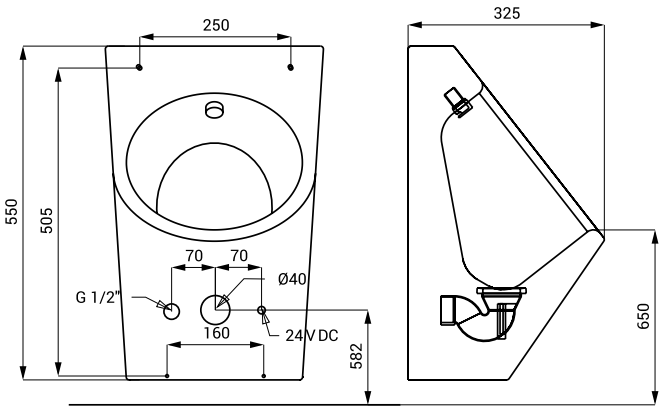

SLPN 09, 09C

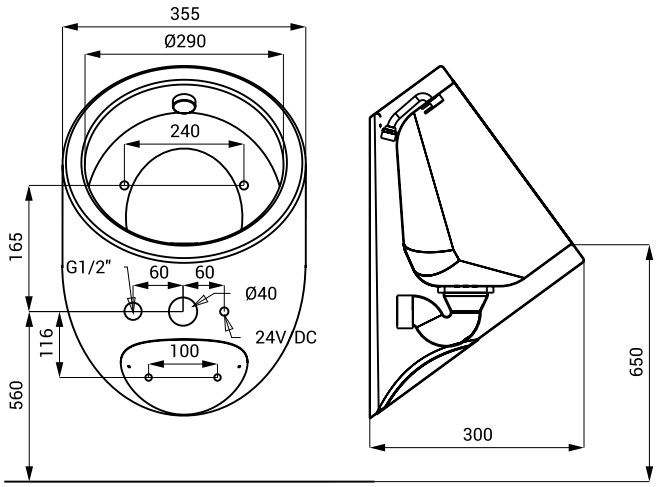

SLPN 10E

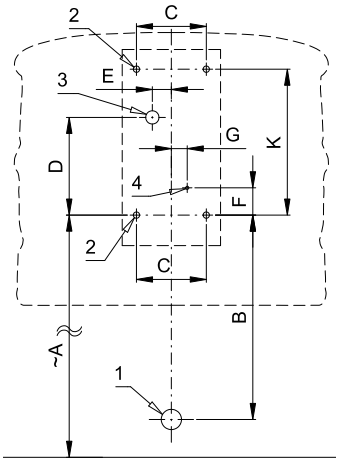

1 - waste pipeline Ø 32 mm
2 - holes for fitting
3 - water supply
4 - power supply

Rozměry (mm)	A	B	C	D	E	F	G	K
KEG	562	332	110	154	30	43	25	230

SLPN 02, 02E, 02C - 05, 05E, 05C

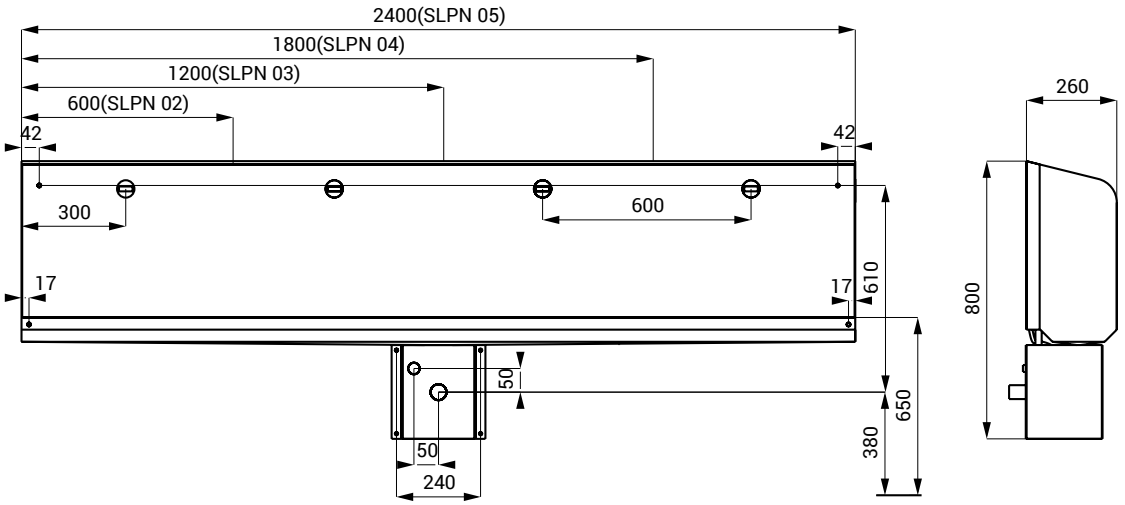

STAINLESS STEEL URINALS AND URINAL TROUGHS

SLPN 02Z - 05Z

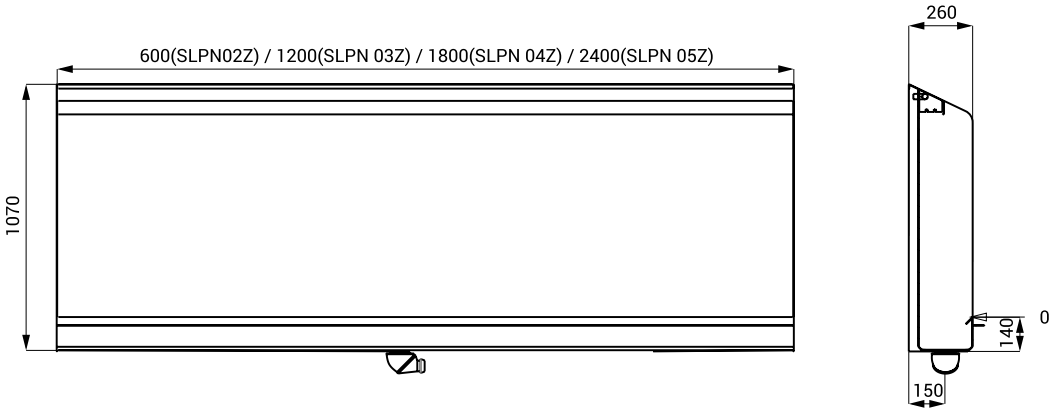

STAINLESS STEEL TOILETS

SLWN 03

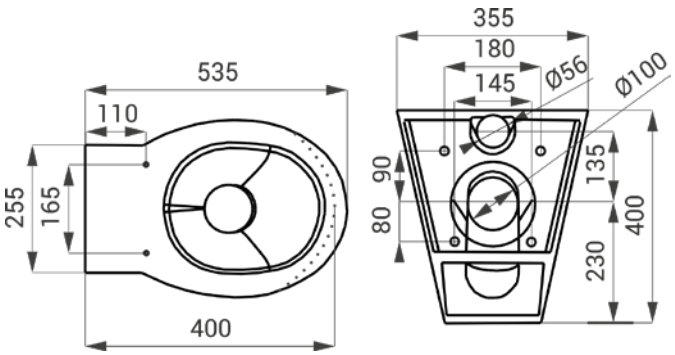

SLWN 04

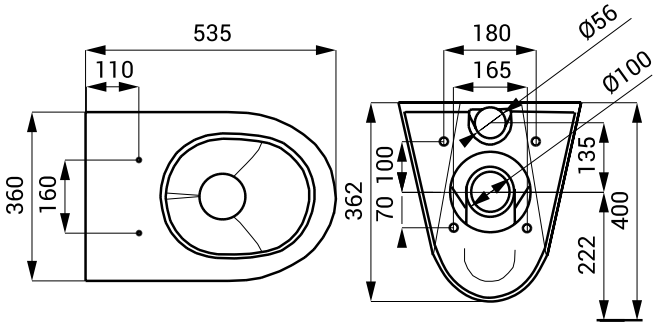

SLWN 05

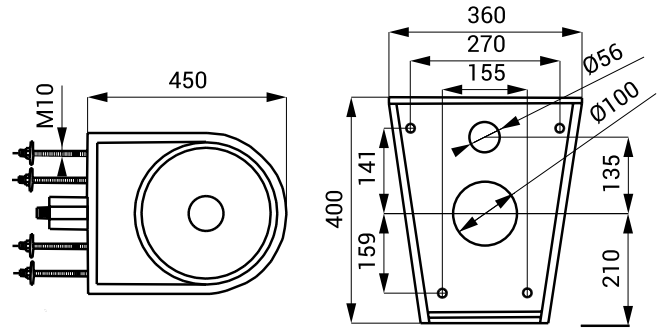

SLWN 07

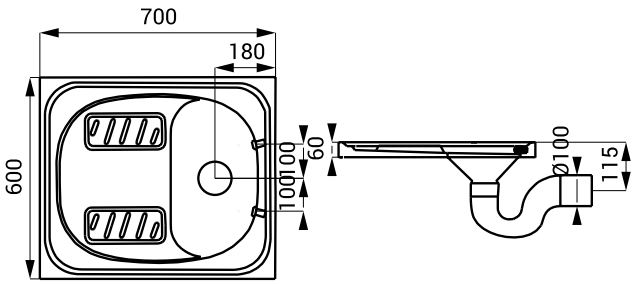

SLWN 09

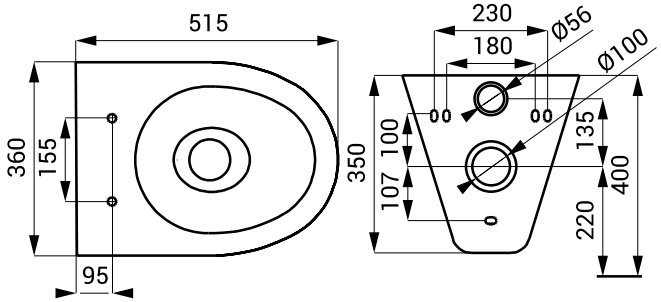

SLWN 11

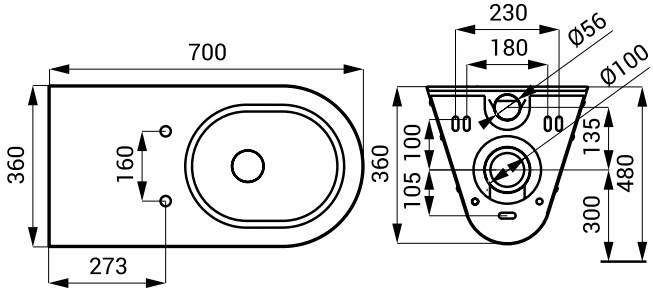

STAINLESS STEEL TOILETS

SLWN 12

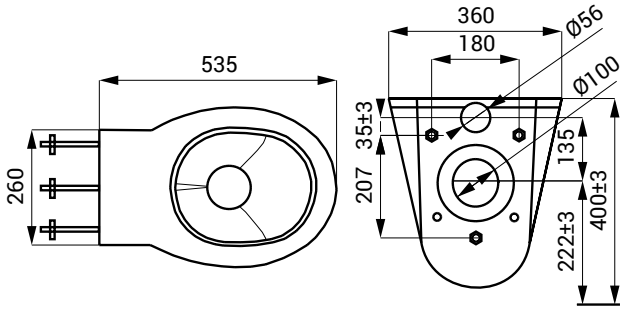

SLWN 13

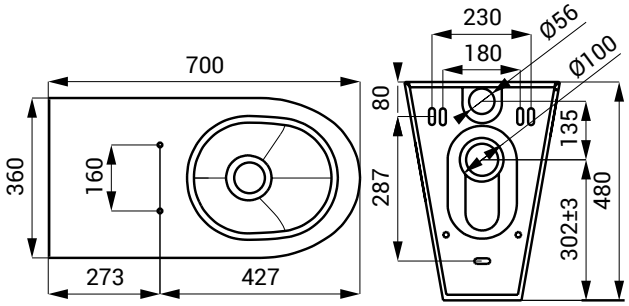

SLWN 14

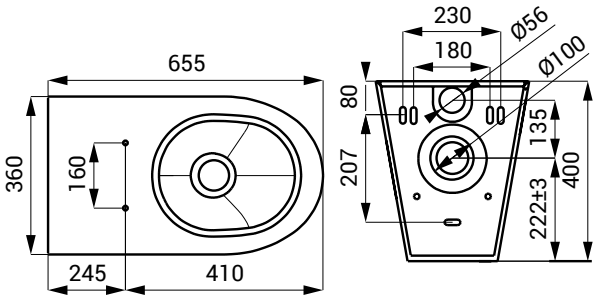

SLWN 15

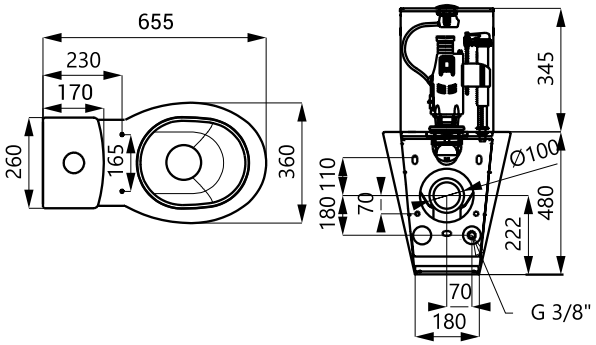

SLWN 16

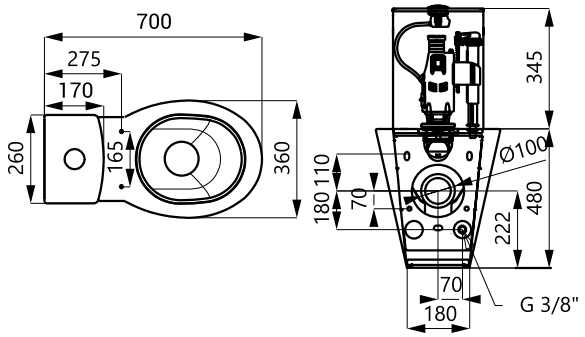

SLWN 19

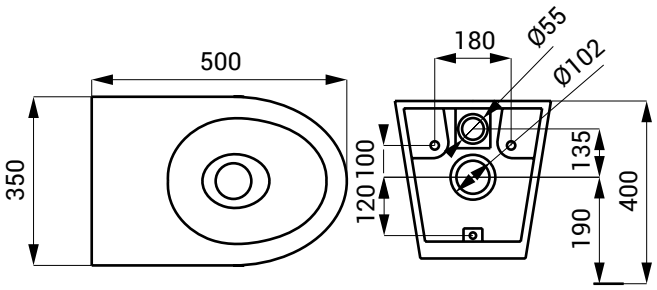

SLWN 30

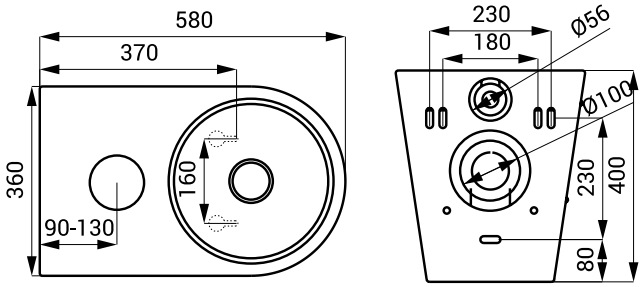

SLA 02	101
SLA 03	95
SLA 04	101
SLA 09	101
SLA 10	101
SLA 11	101
SLA 11A	101
SLA 11B	101
SLA 11C	101
SLA 13	95
SLA 14	95
SLA 20	101
SLA 25	56, 101
SLA 26	102
SLA 27	55, 102
SLA 28	95
SLA 29	102
SLA 30	102
SLA 32	102
SLA 33	102
SLA 36	102
SLA 37	102
SLA 39	95
SLA 40	95
SLA 52A	19, 104
SLA 52B	19, 104
SLD 03	104
SLD 04	104
SLD 05	77, 104
SLD 07	104
SLDN 01	87
SLDN 01N	88
SLDN 02	87
SLDN 02N	88
SLDN 03	87
SLDN 03N	88
SLDN 05	88
SLDN 05N	88
SLDN 06	88
SLDN 06N	88
SLDN 07	88
SLDN 07N	88
SLDN 08E	22, 88
SLKN 01	69
SLKN 01L	69
SLKN 02	69
SLKN 02L	69
SLKN 03A	69
SLKN 03AX	69
SLKN 03B	69
SLKN 03BX	69
SLKN 03C	69
SLKN 03CX	69
SLKN 03D	69
SLKN 03DX	69
SLKN 03E	69
SLKN 03EX	69
SLKN 03F	69
SLKN 03FX	69
SLKN 04A	69
SLKN 04AX	69
SLKN 04B	69
SLKN 04BX	69
SLKN 04C	69
SLKN 04CX	69
SLKN 04D	69
SLKN 04SX	69
SLKN 04E	69
SLKN 04EX	69
SLKN 04F	69
SLKN 04FX	69
SLKN 05A	69
SLKN05AX	69
SLKN 05B	69
SLKN 05BX	69
SLKN 05C	69
SLKN 05CX	69
SLKN 05D	69
SLKN 05DX	69
SLKN 05E	69
SLKN 05EX	69
SLKN 05F	69
SLKN 05FX	69
SLKN 06A	69
SLKN06AX	69
SLKN 06B	69
SLKN 06BX	69
SLKN 06C	69
SLKN 06CX	69
SLKN 06D	69
SLKN 06DX	69
SLKN 06E	69
SLKN 06EX	69
SLKN 06F	69
SLKN 06FX	69
SLKN 07A	69
SLKN 07AX	69
SLKN 07B	69
SLKN 07BX	69
SLKN 07C	69
SLKN 07CX	69
SLKN 07D	69
SLKN 07DX	69
SLKN 07E	69
SLKN 07EX	69
SLKN 07F	69
SLKN 07FX	69
SLKN 08S	69
SLKN 08AX	69
SLKN 08B	69
SLKN 08BX	69
SLKN 08C	69
SLKN 08CX	69
SLKN 08D	69
SLKN 08DX	69
SLKN 08E	69
SLKN 08EX	69
SLKN 08F	69
SLKN 08FX	69
SLKN 09	70
SLKN 10	70
SLKN 11	70
SLKN 12	70
SLKN 13	70
SLKN 14	70
SLKN 15	70
SLKN 16	70
SLKN 17A	69
SLKN 17AX	69
SLKN 17B	69
SLKN 17BX	69
SLKN 17C	69
SLKN 17CX	69
SLKN 17D	69
SLKN 17DX	69
SLKN 17E	69
SLKN 17EX	69
SLKN 17F	69
SLKN 17FX	69
SLKN 18A	69
SLKN 18AX	69
SLKN 18B	69
SLKN 18BX	69
SLKN 18C	69
SLKN 18CX	69
SLKN 18D	69
SLKN 18DX	69
SLKN 18E	69
SLKN 18EX	69
SLKN 18F	69
SLKN 18FX	69
SLO 01L	90
SLO 01S	90
SLO 02E	90
SLO 02M	90
SLP 01Z	51
SLP 02K	5
SLP 02KZ	5
SLP 02N	5
SLP 02NB	5
SLP 02NP	6
SLP 02NZ	5
SLP 02PA	6
SLP 04N	6
SLP 04NB	6
SLP 03K, KZ, KB	5
SLP 03N, NZ, NB	5
SLP 05N	5
SLP 05NZ	5
SLP 06K	5
SLP 07B	6
SLP 07S	6
SLP 07Z	6
SLP 09K	6
SLP 12R	7
SLP 12RB	7
SLP 12RZ	7
SLP 17	6
SLP 17B	6
SLP 19RB	7
SLP 19RS	7
SLP 19RZ	7
SLP 20R	7
SLP 20RZ	7
SLP 23RS	7
SLP 23RZ	7
SLP 24R	7
SLP 24RZ	7
SLP 25R	7
SLP 25RZ	7
SLP 31RB	7
SLP 31RS	7
SLP 31RZ	7
SLP 32R	8
SLP 32RB	8
SLP 32RZ	8
SLP 33R	8
SLP 33RB	8
SLP 33RZ	8
SLP 35S, Z, B	8
SLP 35RS, RZ, RB	8
SLP 36RB	8
SLP 36RS	8
SLP 36RZ	8
SLP 37R	8
SLP 37RB	8
SLP 37RZ	8
SLP 49S, Z, B	9
SLP 49RB	8
SLP49RS	8
SLP49RZ	8
SLP 54RS	9

SLP 54RZ	9
SLP 59S, Z, B	9
SLP 59RB	9
SLP 59 RS	9
SLP 59RZ	9
SLP 68RB	9
SLP 68RS	9
SLP 68RZ	9
SLP69 RB	9
SLP 69 RS	9
SLP 69RZ	9
SLP 70RB	9
SLP 70RS	9
SLP 70RZ	9
SLP 71RB	10
SLP 71RS	10
SLP 71RZ	10
SLP 82RS, RZ	10
SLPN 02	50
SLPN 02C	50
SLPN 02CB	50
SLPN 02E	50
SLPN 02Z	51
SLPN 03	50
SLPN 03C	50
SLPN 03CB	50
SLPN 03E	50
SLPN 03Z	51
SLPN 04	50
SLPN 04C	50
SLPN 04CB	50
SLPN 04E	51
SLPN 04Z	51
SLPN 05	51
SLPN 05E	51
SLPN 05Z	51
SLPN 06	49
SLPN 07	49
SLPN 07C	49
SLPN 07CB	49
SLPN 07CZ	49
SLPN 07E	49
SLPN 07EB	49
SLPN 09	49
SLPN 09C	49
SLPN 09CB	49
SLPN 09CZ	49
SLPN 10E	49
SLPN 10EB	49
SLR 01	97
SLR 01L	97
SLR 02	97
SLR 02D	97
SLR 02N	97
SLR 03	97
SLR 03N	98
SLR 03Z	98
SLR 04	98
SLR 06	98
SLR 21	98
SLR 22	98
SLR 23	98
SLR 24	98
SLR 54	104
SLS 01AK	25
SLS 01AKB	25
SLS 01N	25
SLS 01NB	25
SLS 01NP	25
SLS 01NPB	25
SLS 01P	25
SLS 01PA	25
SLS 01PB	25
SLS 02	25
SLS 02B	25
SLS 02P	26
SLS 02PB	26
SLS 02PT	26
SLS 02PTB	26
SLS 02T	26
SLS 02TB	26
SLS 03	26
SLS 03B	26
SLS 03S	26
SLS 03SB	26
SLS 30B	26
SLS 30C	26
SLS 30D	26
SLS 30E	26
SLSN 01E	59
SLSN 01EB	59
SLSN 01P	59
SLSN 01PA	60
SLSN 01PB	59
SLSN 02E	59
SLSN 02EB	59
SLSN 02ET	59
SLSN 02ETB	59
SLSN 02P	59
SLSN 02PA	60
SLSN 02PB	59
SLSN 02PT	59
SLSN 02PTB	59
SLSN 06	60
SLSN 07	60
SLSN 08	60
SLSN 09	60
SLSN 10	60
SLSN 11	60
SLSN 19	61
SLSN 20	61
SLSN 21	61
SLSN 21D	61
SLSN 21V	61
SLSN 22	61
SLSN 22D	61
SLSN 22V	61
SLSN 23	62
SLSN 23H	62
SLSN 23HO	62
SLSN 23Z	62
SLSN 24	62
SLSN 25	62
SLSN 26	62
SLSN 27	62
SLT 04	104
SLT 05	104
SLT 07	104
SLT 08	104
SLT 09	104
SLT 10	104
SLT 100U	96
SLT 101U	96
SLT 109U	96
SLT 113U	96
SLT 131S	96
SLT 138S	96
SLT 150P	96
SLT 153P	96
SLT 161W	97
SLT 164W	97
SLU 01N	13
SLU 01NB	13
SLU 01NH	13
SLU 01NHB	13
SLU 02BT	13
SLU 02N	13
SLU 02NB	13
SLU 02T	13
SLU 03D	17
SLU 03DB	17
SLU 04H17	18
SLU 04H17B	18
SLU 04H25	18
SLU 04H25B	18
SLU 04HT17	18
SLU 04HT17B	18
SLU 04HT25	18
SLU 04HT25B	18
SLU 04P17	18
SLU 04P17B	18
SLU 04P25	18
SLU 04P25B	18
SLU 08	13
SLU 08B	13
SLU 08D	13
SLU 08DB	13
SLU 08N	13
SLU 08NB	13
SLU 08ND	14
SLU 08NDB	14
SLU 09PTB	18
SLU 10	17
SLU 10B	17
SLU 15	14
SLU 15B	14
SLU 23D	17
SLU 23DB	17
SLU 24D	17
SLU 24DB	17
SLU 25	19
SLU 25B	19
SLU 25S	19
SLU 25SB	19
SLU 34, 34B	14
SLU 35, 35B	14
SLU 36, 36B	14
SLU 37	14
SLU 37B	14
SLU 39	19
SLU 39B	19
SLU 39BX	19
SLU 39PBX	19
SLU 39PX	19
SLU 39X	19
SLU 42KB	20
SLU 43B	19
SLU 43KB	20
SLU 44P	20
SLU 44PB	20
SLU 44PP	20
SLU 45	14
SLU 45B	14
SLU 45MD	20
SLU 46	14
SLU 46B	14
SLU 45M2	20
SLU 45M3	20
SLU 45M4	20
SLU 45M5	20
SLU 45M6	20
SLU 46MD	20

SLU 54N	15
SLU 54NB	15
SLU 60	15
SLU 60B	15
SLU 63	15
SLU 63B	15
SLU 76	15
SLU 76B	15
SLU 83	15
SLU 83B	15
SLU 91N	15
SLU 91NB	15
SLU 91ND	16
SLU 91NDB	16
SLU 91NP	16
SLU 91NPB	16
SLU 91NPD	16
SLU 91NPDB	16
SLU 92N	16
SLU 92NB	16
SLU 92ND	16
SLU 92NDB	16
SLU 92NP	17
SLU 92NPB	17
SLU 92NPD	17
SLU 92NPDB	17
SLU 93N	15
SLU 93NB	15
SLU 93ND	16
SLU 93NDB	16
SLU 93NP	16
SLU 93NPB	16
SLU 93NPD	16
SLU 93NPDB	16
SLUN 01	33
SLUN 02	33
SLUN 03	44
SLUN 04E	44
SLUN 04EB	44
SLUN 04ET	44
SLUN 04ETB	44
SLUN 06	44
SLUN 06EX	44
SLUN 06EXB	44
SLUN 07E	45
SLUN 07EB	45
SLUN 07ET	45
SLUN 07ETB	45
SLUN 10	41
SLUN 10K	41
SLUN 10KL	41
SLUN 10L	41
SLUN 10P	41
SLUN 10PA	41
SLUN 10PL	41
SLUN 11	33
SLUN 13	33
SLUN 14	39
SLUN 14E	39
SLUN 14EB	39
SLUN 15	45
SLUN 16	45
SLUN 17	33
SLUN 19	33
SLUN 19P	34
SLUN 20	33
SLUN 20P	34
SLUN 22M	34
SLUN 23	39
SLUN 23E	40
SLUN 23EB	40
SLUN 23M	39
SLUN 24X	34
SLUN 25X	34
SLUN 26	34
SLUN 26A	34
SLUN 28A	35
SLUN 32	35
SLUN 32X	35
SLUN 34	35
SLUN 36A	35
SLUN 41M	35
SLUN 43	40
SLUN 43C	40
SLUN 43CS	40
SLUN 43E	40
SLUN 43EB	40
SLUN 43S	40
SLUN 44	35
SLUN 44X	35
SLUN 45	36
SLUN 45X	36
SLUN 47	36
SLUN 47X	36
SLUN 50E	42
SLUN 50EA	42
SLUN 50ET	42
SLUN 50PA	42
SLUN 51E	42
SLUN 51ET	42
SLUN 52E	42
SLWN 52ET	42
SLUN 53	42
SLUN 53ET	42
SLUN 54	43
SLUN 54L	43
SLUN 55	43
SLUN 55L	43
SLUN 56	43
SLUN 56L	43
SLUN 57	36
SLUN 58	36
SLUN 59	36
SLUN 60	33
SLUN 60P	34
SLUN 61	33
SLUN 61P	34
SLUN 62	40
SLUN 62E	40
SLUN 62EB	40
SLUN 62S	41
SLUN 64	36
SLUN 65	37
SLUN 66	37
SLUN 68	37
SLUN 69	37
SLUN 70H	37
SLUN 70P	37
SLUN 71E	38
SLUN 71EB	38
SLUN 71P	38
SLUN 71PB	38
SLUN 72E	38
SLUN 72EB	38
SLUN 72ET	38
SLUN 72ETB	38
SLUN 72P	38
SLUN 72PB	38
SLUN 72PT	38
SLUN 72PTB	38
SLUN 75E	39
SLUN 75EB	39
SLUN 76E	39
SLUN 76EB	39
SLUN 76ET	39
SLUN 76ETB	39
SLUN 77	39
SLUN 80E	43
SLUN 80EA	43
SLUN 80ET	43
SLUN 80PA	44
SLUN 81E	43
SLUN 81ET	43
SLUN 82E	43
SLUN 82ET	43
SLUN 83E	43
SLUN 83ET	43
SLVN 01	65
SLVN 02	65
SLVN 02E	65
SLVN 02EB	65
SLVN 03	65
SLVN 03A	65
SLVN 04	65
SLVN 05	65
SLW 01NK	29
SLW 01NKB	29
SLW 01P	29
SLW 01PA	29
SLW 01PB	29
SLW 02A	30
SLW 02F	30
SLW 02PA	29
SLW 03PA	29
SLW 04PA	29
SLW 10NK, NKB	30
SLW 10P, PB, PA	30
SLW 30A	30
SLW 30E	30
SLW 30F	30
SLW 50	30
SLW 51	30
SLW 52	30
SLW 53	30
SLWN 03	53
SLWN 04	53
SLWN 05	53
SLWN 07	55
SLWN 08L	55
SLWN 08LP	55
SLWN 08P	55
SLWN 08PP	55
SLWN 08ZL	55
SLWN 08ZP	55
SLWN 08ZPP	55
SLWN 08ZLP	55
SLWN 09	53
SLWN 11	53
SLWN 12	53
SLWN 13	53
SLWN 14	54
SLWN 15	54
SLWN 16	54
SLWN 18L	56
SLWN 18LP	56
SLWN 18P	56
SLWN 18PP	56
SLWN 18ZL	56
SLWN 18ZLP	56
SLWN 18ZP	56
SLWN 18ZPP	56
SLWN 19	54

SLWN 28	56
SLWN 28Z	56
SLWN 30	54
SLWN 38	56
SLWN 38Z	56
SLZ 01Y	94
SLZ 01Z	94
SLZ 04X	94
SLZ 04Y	94
SLZ 04Z	94
SLZ 05	94
SLZ 06	95
SLZ 07	95
SLZ 08	95
SLZA 01LM	73
SLZA 01LMZ	73
SLZA 01LN	73
SLZA 01LNZ	73
SLZA 01M	73
SLZA 01MZ	73
SLZA 01N	73
SLZA 01NZ	73
SLZA 02LM	73
SLZA 02LMZ	73
SLZA 02LN	73
SLZA 02LNZ	73
SLZA 02M	73
SLZA 02MZ	73
SLZA 02N	73
SLZA 02NZ	73
SLZA 03M	74
SLZA 03MZ	74
SLZA 03N	74
SLZA 03NZ	74
SLZA 15	77
SLZA 16	77
SLZA 17	77
SLZA 20	76
SLZA 20H	76
SLZA 20K	76
SLZA 20KH	76
SLZA 20KT	76
SLZA 20P	75
SLZA 20PH	75
SLZA 20PK	75
SLZA 20PKH	75
SLZA 20PKT	75
SLZA 20PT	75
SLZA 20T	76
SLZA 21	76
SLZA 21H	76
SLZA 21K	76
SLZA 21KH	76
SLZA 21KT	76
SLZA 21P	75
SLZA 21PH	75
SLZA 21PK	75
SLZA 21PKH	75
SLZA 21PKT	75
SLZA 21PT	75
SLZA 21T	76
SLZA 28	74
SLZA 29	74
SLZA 29T	74
SLZA 30	78
SLZA 30C	78
SLZA 30CZ	78
SLZA 31	77
SLZA 32	77
SLZA 32T	78
SLZA 35	78
SLZA 40	74
SLZA 40Z	74
SLZA 41	74
SLZA 41Z	74
SLZA 50	77
SLZA 51	78
SLZA 52	77
SLZM 02	93
SLZM 02D	93
SLZM 02DX	93
SLZM 02X	93
SLZM 03	93
SLZM 03D	93
SLZM 03DP	93
SLZM 03DX	93
SLZM 03DXP	93
SLZM 03S	93
SLZM 03SD	93
SLZM 03SDP	93
SLZM 03SDX	93
SLZM 03SDXP	93
SLZM 03SX	93
SLZM 03X	93
SLZM 04	94
SLZM 04X	94
SLZM 05	94
SLZM 05X	94
SLZM 06	94
SLZN 01	81
SLZN 03	82
SLZN 05	85
SLZN 06	85
SLZN 07	85
SLZN 09	81
SLZN 10	82
SLZN 10X	82
SLZN 11	82
SLZN 11X	82
SLZN 12	82
SLZN 12X	82
SLZN 13	51
SLZN 15	82
SLZN 15X	82
SLZN 17	85
SLZN 19	90
SLZN 19X	90
SLZN 20	82
SLZN 20X	82
SLZN 21	82
SLZN 21Z	83
SLZN 22	83
SLZN 23	83
SLZN 23X	83
SLZN 24	83
SLZN 26	81
SLZN 26Z	81
SLZN 27	91
SLZN 30	91
SLZN 31C	54, 92
SLZN 31D	54, 92
SLZN 35	92
SLZN 37	81
SLZN 37X	81
SLZN 39	85
SLZN 40	83
SLZN 41	83
SLZN 42	83
SLZN 43	83
SLZN 44AA	91
SLZN 44AB	91
SLZN 44AC	91
SLZN 44AD	91
SLZN 44B	91
SLZN 44C	91
SLZN 44D	91
SLZN 44E	91
SLZN 44F	91
SLZN 44G	91
SLZN 44H	91
SLZN 44J	91
SLZN 44K	91
SLZN 44L	91
SLZN 44M	91
SLZN 44N	91
SLZN 44P	91
SLZN 44R	91
SLZN 44S	91
SLZN 44T	91
SLZN 44U	91
SLZN 44V	91
SLZN 45	89
SLZN 46	89
SLZN 46D	89
SLZN 47	81
SLZN 47D	81
SLZN 47H	81
SLZN 49AA	84
SLZN 49AB	84
SLZN 49AC	84
SLZN 49AD	84
SLZN 52	91
SLZN 53	82
SLZN 54	94
SLZN 55	91
SLZN 56Z	84
SLZN 57	89
SLZN 57X	89
SLZN 62Z	85
SLZN 63Z	84
SLZN 64	92
SLZN 64N	92
SLZN 65	92
SLZN 67	89
SLZN 68	89
SLZN 69	65
SLZN 70	89
SLZN 71E	22, 85
SLZN 72E	22, 85
SLZN 73	85
SLZN 74	86
SLZN 76	92
SLZN 77	84
SLZN 78X	84
SLZN 79X	84
SLZN 80X	84
SLZN 83E	21, 86
SLZN 83E2	21, 86
SLZN 83E3	21, 86
SLZN 83E4	21, 86
SLZN 83E5	21, 86
SLZN 83E6	21, 86
SLZN 83ER	21, 86
SLZN 83ER2	21, 86
SLZN 83ER3	21, 86
SLZN 83ER4	21, 86
SLZN 83ER5	21, 86
SLZN 83ER6	21, 86
SLZN 91E	22, 87
SLZN 91E2	22, 87
SLZN 91E3	22, 87
SLZN 91E4	22, 87

SLZN 91E5	22, 87
SLZN 91E6	22, 87

PIKTOGRAM

EXTENDED 5 YEARS GUARANTEE PERIOD FOR SANELA ELECTRONICS

ECONOMICAL URINAL FLUSHING SYSTEM WITH FLUSHING BY 1 LITER OF WATER, SPECIAL SUCTION SIPHON IS A PART OF DELIVERY

ECONOMICAL AERATOR, RATE OF FLOW 6 L/MIN, ASSURES CONSIDERABLE SAVING OF WATER

VANDAL-PROOF, HIGHLY RESISTANT TO WEAR AND MECHANICAL DAMAGE

PRODUCT THAT MEET THE REQUIREMENTS OF HANDICAPPED AND PEOPLE WITH LIMITED MOBILITY

PRODUCT SUITABLE FOR HEALTH CARE FACILITIES

AUTOMATIC HYGIENIC FLUSH POSSIBILITY OF ACTIVATION BY TAPS AND SHOWERS AS THE PREVENTION AGAINST LEGIONELLA BACTERIA

PRODUCT SUITABLE FOR PRISONS AND PSYCHIATRIC HOSPITALS, MEET THE REQUIREMMENTS OF HIGH RESISTANCE TO MECHANICAL DAMAGES AND MINIMIZE POSSIBILITY OF SELF-HARM OR SUICIDE OF USERS

LEAD-FREE TECHNOLOGY MEETS THE STRICT STANDARDS FOR DRINKING WATER DISTRIBUTION, WHICH IS THANKS TO ITS EASY RECYCLABILITY ALSO VERY ENVIRONMENTALLY FRIENDLY

NOTES

SANELA spol. s r.o. Dukelských hrdinů 989 • 563 01 Lanškroun
tel.: +420 465 350 770–6 • fax: +420 465 350 780 e-mail: sanela@sanela.cz, **www.sanela.eu**

CE
EN ISO 9001:2015